Porting and Performance of the Community Climate System Model (CCSM3) on the Cray X1

SC04

November 9, 2004

David L. Lawrence Convention Center

Pittsburgh, Pennsylvania

ornl

NCAR

Co-Authors

- National Center for Atmospheric Research (NCAR)
  - George R. Carr Jr, gcarr@ucar.edu
- Oak Ridge National Laboratory (ORNL)
  - John B. Drake, drakejb@ornl.gov
  - Michael W. Ham, hammw@ornl.gov
  - Forrest M. Hoffman, forrest@climate.ornl.gov
  - Patrick H. Worley, worleyph@ornl.gov
- Cray, Inc. (CRAY)
  - Matthew J. Cordery, mcordery@cray.com
  - Ilene L. Carpenter (currently with SGI), ilene@sgi.com

… at least another 20 supporters including

- Lawrence Buja, NCAR/CGD

ornl

NCAR

Acknowledgements

- ORNL research sponsored by the Atmospheric and Climate Research Division and the Office of Mathematical, Information, and Computational Sciences, Office of Science, U.S. Department of Energy under Contract No. DE-AC05-00OR22725 with UT-Battelle, LLC.
- These slides have been coauthored by a contractor of the U.S. Government under contract No. DE-AC05-00OR22725. Accordingly, the U.S. Government retains a nonexclusive, royalty-free license to publish or reproduce the published form of this contribution, or allow others to do so, for U.S. Government purposes
- Oak Ridge National Laboratory is managed by UT-Battelle, LLC for the United States Department of Energy under Contract No. DE-AC05-00OR22725.
- The National Center for Atmospheric Research is funded by the National Science Foundation.

ornl

NCAR

Overview

- CCSM3 Introduction
- Cray X1 Introduction and Status
- An Orientation on Performance
- Some Results
- Future Activities

ornl

NCAR

CCSM Introduction

- CCSM, the Community Climate System Model, is a coupled model for simulating the earth's climate system.
  - Developed at NCAR with significant collaborations with DOE, NASA and the university community
- Components in CCSM3 include
  - Atmospheric Model – CAM 3.0

    T31: (48 x 96 x 26) **T42**: (64 x 128 x 26) **T85**: (128 x 256 x 26)
  - Ocean Model – modified version of POP 1.4.3

    3 degree: (100 x 116 x 25) **1 degree**: (320 x 384 x 40)
  - Sea Ice Model – CSIM5 - resolutions same as for ocean
  - Land Model – CLM2
  - Coupler - CPL6

ornl

NCAR

CCSM Models

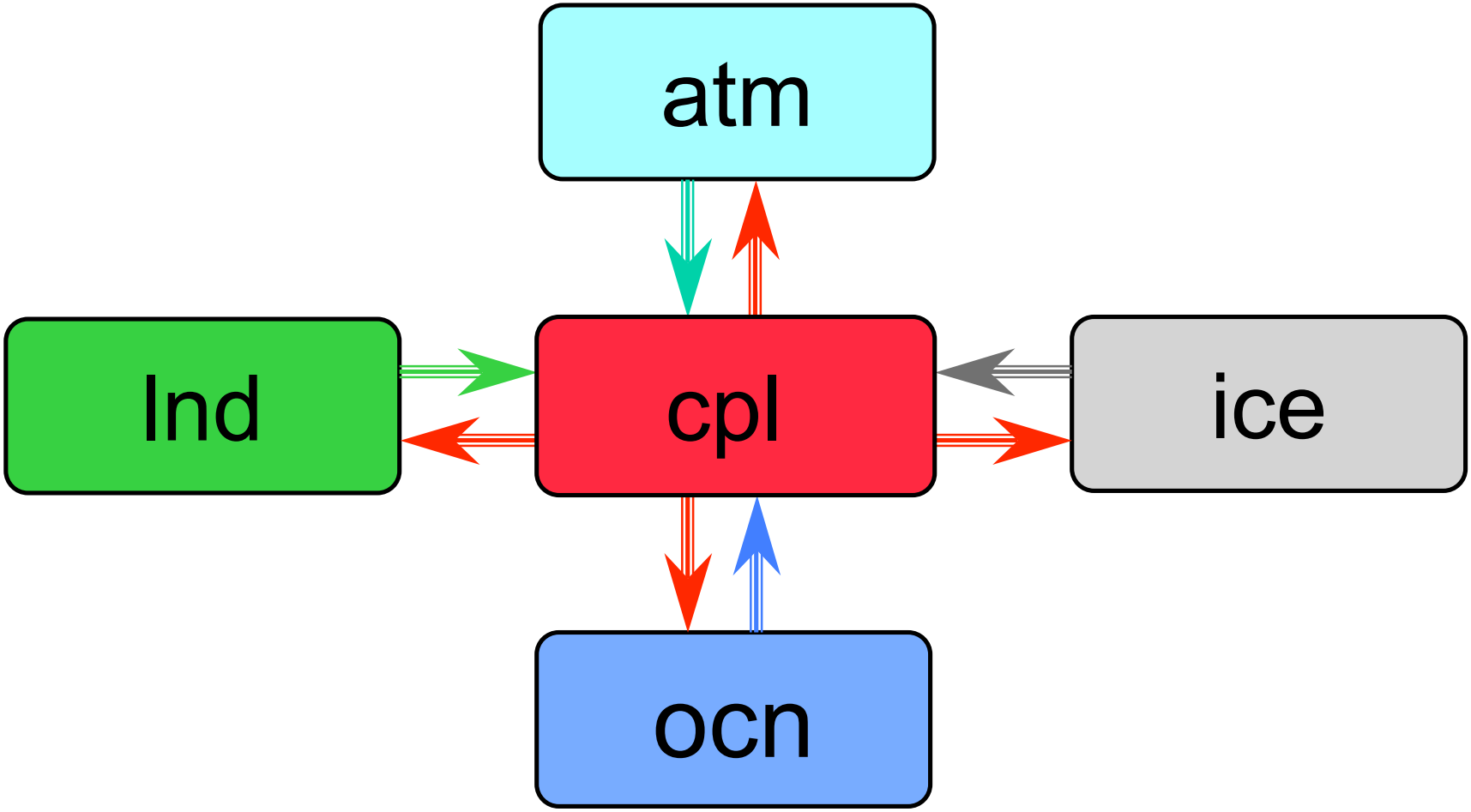

Supported Machines

- IBM Power3, Power4 - fully validated
- SGI Origin - not yet validated
- Xeon Linux Clusters (GigE and Myrinet) - recently validated T31
- Cray X1 - recently validated T31, just starting T85
- SGI Altix - ready for T31 Validation
- Earth Simulator - fully validated on pre-release
- Opteron Linux Clusters (Myrinet) - work begun
- Xeon Linux Clusters (InfiniBand) - work begun

See CCSM support URL for support definitions and machine support changes.

ornl

NCAR

PHOENIX

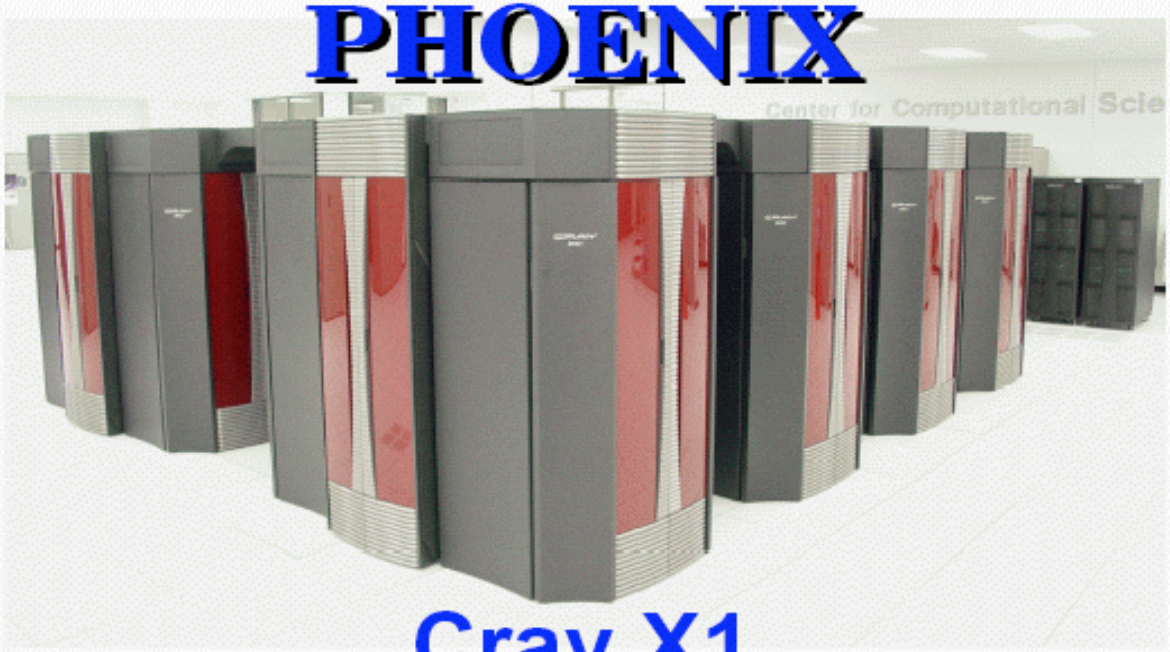

Cray X1

- 128 SMP nodes
- 4 Multi−Streaming Processors (MSPs) per node
- 4 Single Streaming Processors (SSPs) per MSP
- Two 32−stage, 64−bit wide vector units running at 800 MHz and one 2−way superscalar unit running at 400 MHz per SSP
- 2 MB E−cache per MSP
- 16 GB of memory per node

512 processors (MSPs), 2048 GB of memory, and 6400 GFlop/s peak

ornl

NCAR

Multistreaming Processor

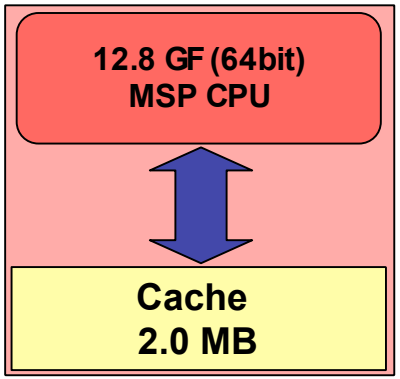

=

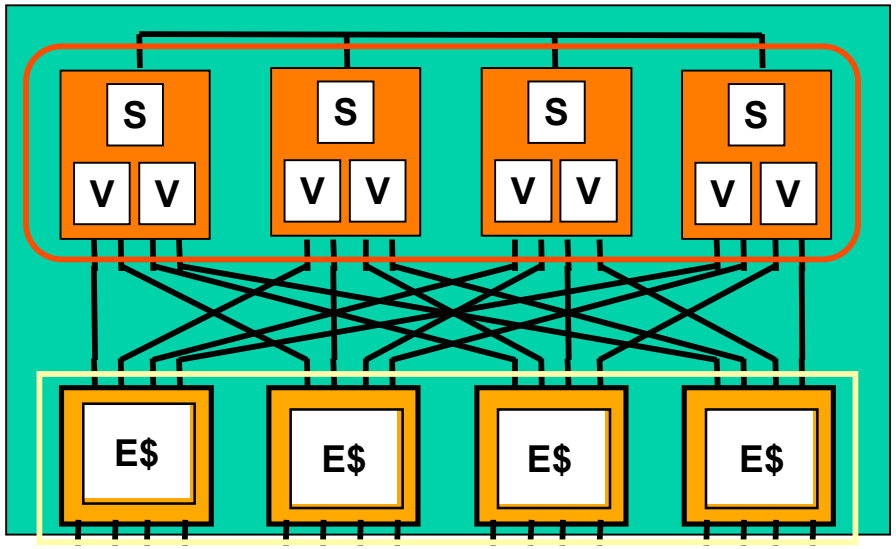

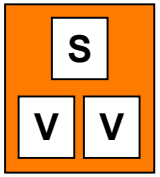

SSP – Single-Streaming Processor

- Two vector pipe units
- One 4-way superscalar processor

ornl

NCAR

Cray X1 Processor Node Module

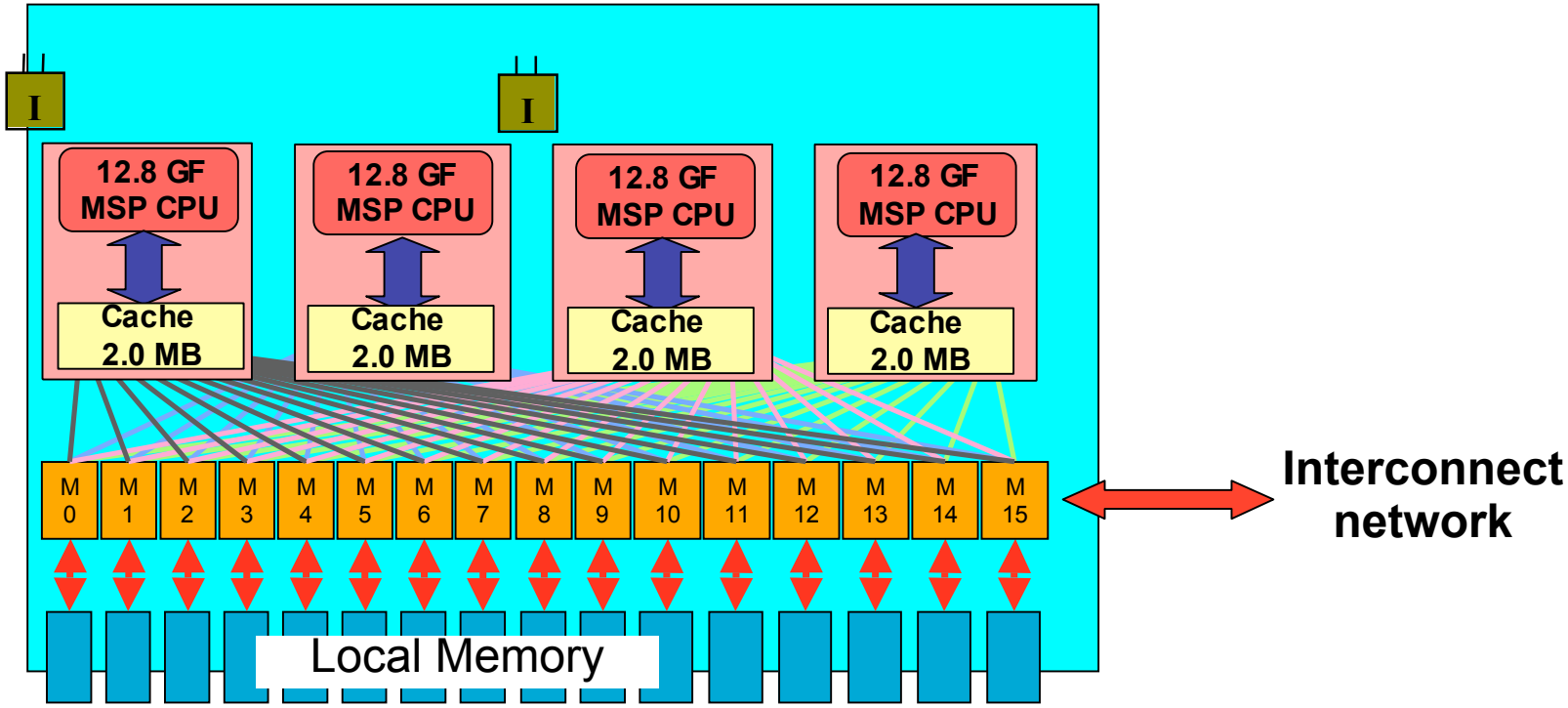

Approximate Timelines

=> December 2003:

- Component model vectorization

=> April, 2004:

- Merge of vector versions into development branch, including basic support for the X1
- CAM/CLM2 standalone model (spectral Eulerian dycore) validated on the Earth Simulator and X1

=> June, 2004:

- CCSM validated on Earth Simulator and achieves required percentage of vectorization
- CCSM3 released, including basic support for X1

ornl

NCAR

X1 Project Highlights

- Worked through initial problems with
  - Compiler
  - Kernel panic
  - Configuration issues (netcdf)
  - Scripts setup
- T31x3 climate validation completed, T85x1 just starting
- Choice of MSP (MPI only) orientation at this time due to OMP restrictions with MPMD
- Some run configuration load balancing tests completed
- Regression test process begun
- Some *VERY* early performance numbers produced
- Functionality *NOW*, performance soon, portability required

ornl

NCAR

Remaining X1 Issues

- Model requires a particular (old) version of system software (compilers and MPI libraries).
- Model time in POP and CSIM5 suddenly becomes corrupted after approximately 10 simulation years.
- Performance variability is being explored.
- Some performance timers in coupler are broken.
- Need to harden run scripts for ORNL environment.
- Long term archiving script is not yet set up for ORNL.
- Ice model validation may need to be revisited.
- Production script enhancements needed to speed up build process.
- General performance improvements to continue

ornl

NCAR

The Production Process

- Compile/Load
- Data Pre-stage - startup data files, restart files
- Job startup - system load, MPI startup, data ingest, data distribution
- Job - daily/monthly log entries, monthly results
- Job termination - create restart files
- (optional) Short term archive (usually non-scrubbed disk)
- (optional) Long term archive (tape)
- Monitor progress (manual)
- Submit next job (can be automated in run script)

ornl

NCAR

CCSM T85 Data Output

T85 IPCC: 9.6 GBytes/simulation year

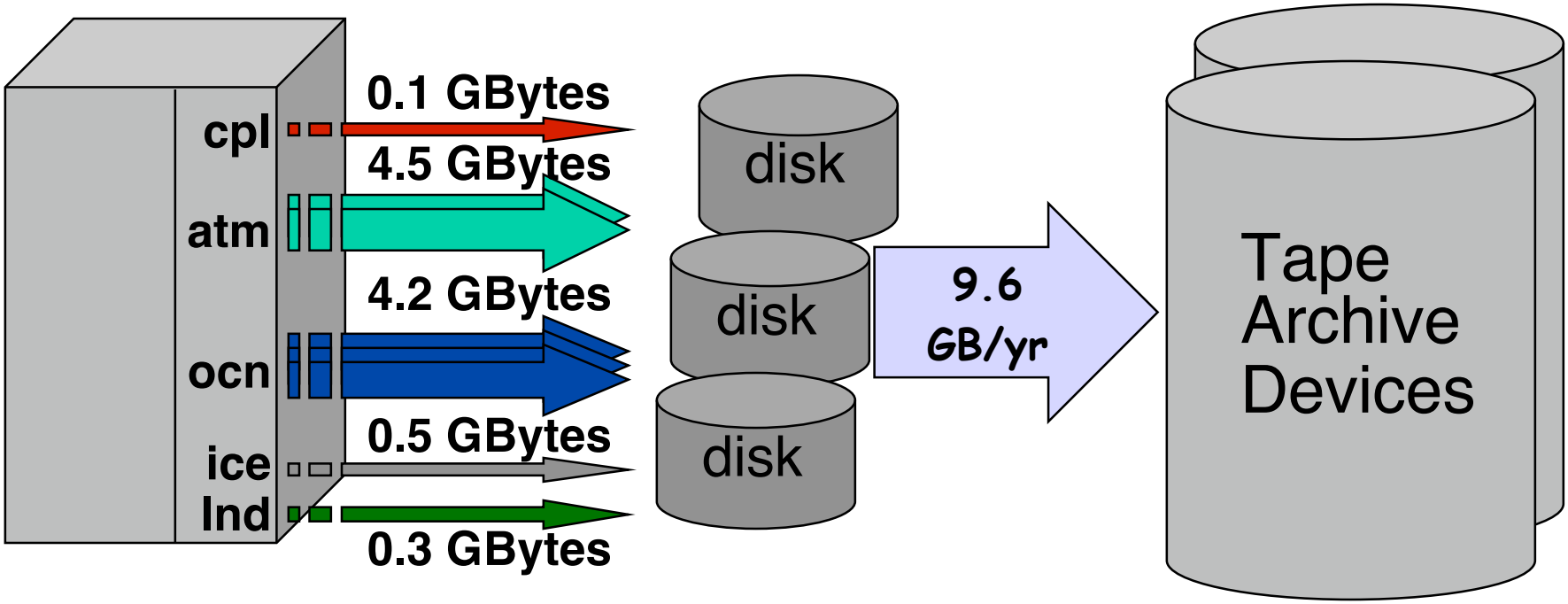

IPCC ES Production Summary

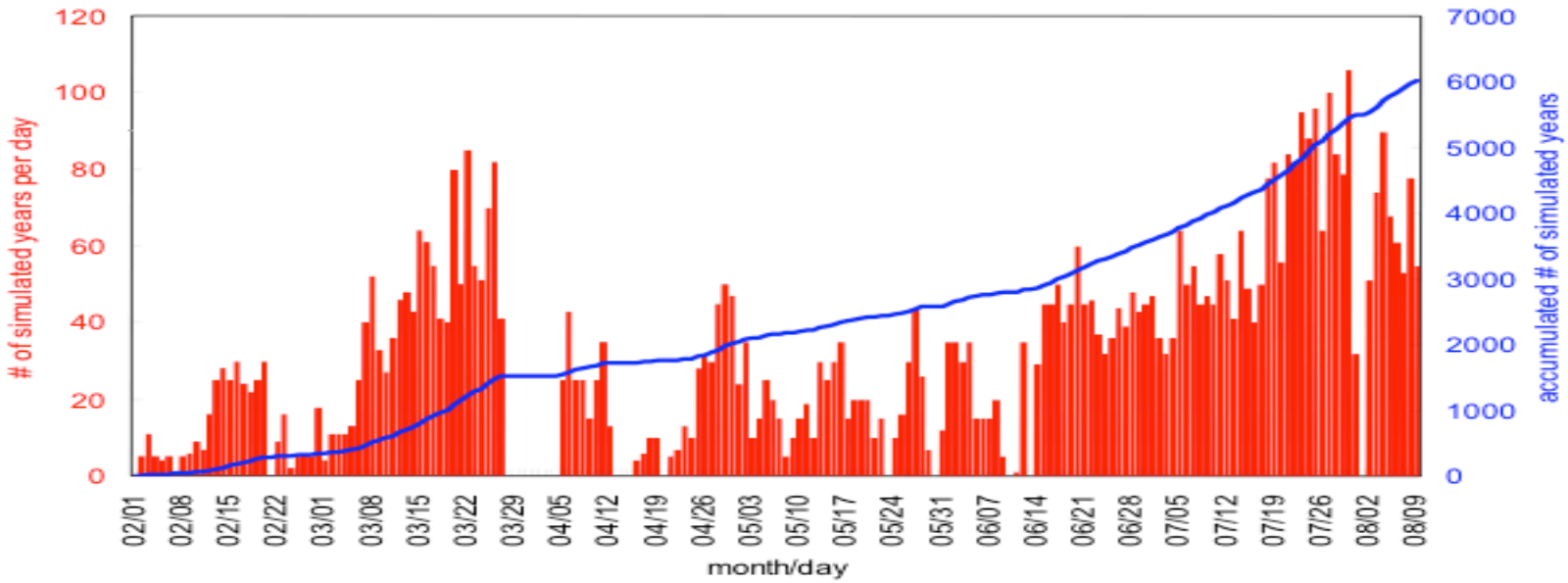

Roughly 60 TBytes of history data produced!

At times, could generate data faster than could get it to tape, leading to production stalls!

Special thanks to **Dr. Yoshikatsu Yoshida and all his colleagues of the Central Research Institute of Electric Power Industry (CRIEPI)**

ornl

NCAR

X1 Validation Observation

- Run time variability and average run time
  - T31x3 validation
    - Showed that could run 7-8 seconds per day (on 36 MSPs)
    - One example: mean 12 seconds, range 7 to 46 seconds, mode of 10. Eight hour run on 36 "CPUs"
  - Issue also seen on IBM and SGI (Origin and Altix) systems. Variability even worse on Linux clusters.
  - Possible sources
    - System process/processor migration
    - Job impacts by I/O sub-system
    - Timers do *not* seem to be part of the problem

ornl

NCAR

T31x3 Production Job Log

- (tStamp_write) cpl model date 0509-12-05 00000s wall clock 2004-10-06 17:45:08 avg dt 8s dt 8s
- (tStamp_write) cpl model date 0509-12-06 00000s wall clock 2004-10-06 17:45:16 avg dt 8s dt 8s
- (tStamp_write) cpl model date 0509-12-07 00000s wall clock 2004-10-06 17:45:28 avg dt 8s dt 12s
- (tStamp_write) cpl model date 0509-12-08 00000s wall clock 2004-10-06 17:45:36 avg dt 8s dt 8s
- (tStamp_write) cpl model date 0509-12-09 00000s wall clock 2004-10-06 17:45:44 avg dt 8s dt 8s
- (tStamp_write) cpl model date 0509-12-10 00000s wall clock 2004-10-06 17:45:52 avg dt 8s dt 8s
- (tStamp_write) cpl model date 0509-12-11 00000s wall clock 2004-10-06 17:45:59 avg dt 8s dt 8s
- (tStamp_write) cpl model date 0509-12-12 00000s wall clock 2004-10-06 17:46:07 avg dt 8s dt 8s
- (tStamp_write) cpl model date 0509-12-13 00000s wall clock 2004-10-06 17:46:15 avg dt 8s dt 8s
- (tStamp_write) cpl model date 0509-12-14 00000s wall clock 2004-10-06 17:46:23 avg dt 8s dt 8s
- (tStamp_write) cpl model date 0509-12-15 00000s wall clock 2004-10-06 17:46:31 avg dt 8s dt 8s
- (tStamp_write) cpl model date 0509-12-16 00000s wall clock 2004-10-06 17:47:13 avg dt 8s dt 42s
- (tStamp_write) cpl model date 0509-12-17 00000s wall clock 2004-10-06 17:47:27 avg dt 8s dt 14s
- (tStamp_write) cpl model date 0509-12-18 00000s wall clock 2004-10-06 17:47:35 avg dt 8s dt 8s

ornl

NCAR

Performance: Of Two Minds

- Capability
  - How fast can we run this important job?
  - Can we run this really big problem at all?
- Capacity
  - How much combined work can we get done each day?

ornl

NCAR

Performance Metrics

- Simulated years per wall clock day
  - Optimize for single job maximum performance
- Simulated years per wall clock day per "cpu"
  - Optimize for system aggregate performance

ornl

NCAR

Raw Performance

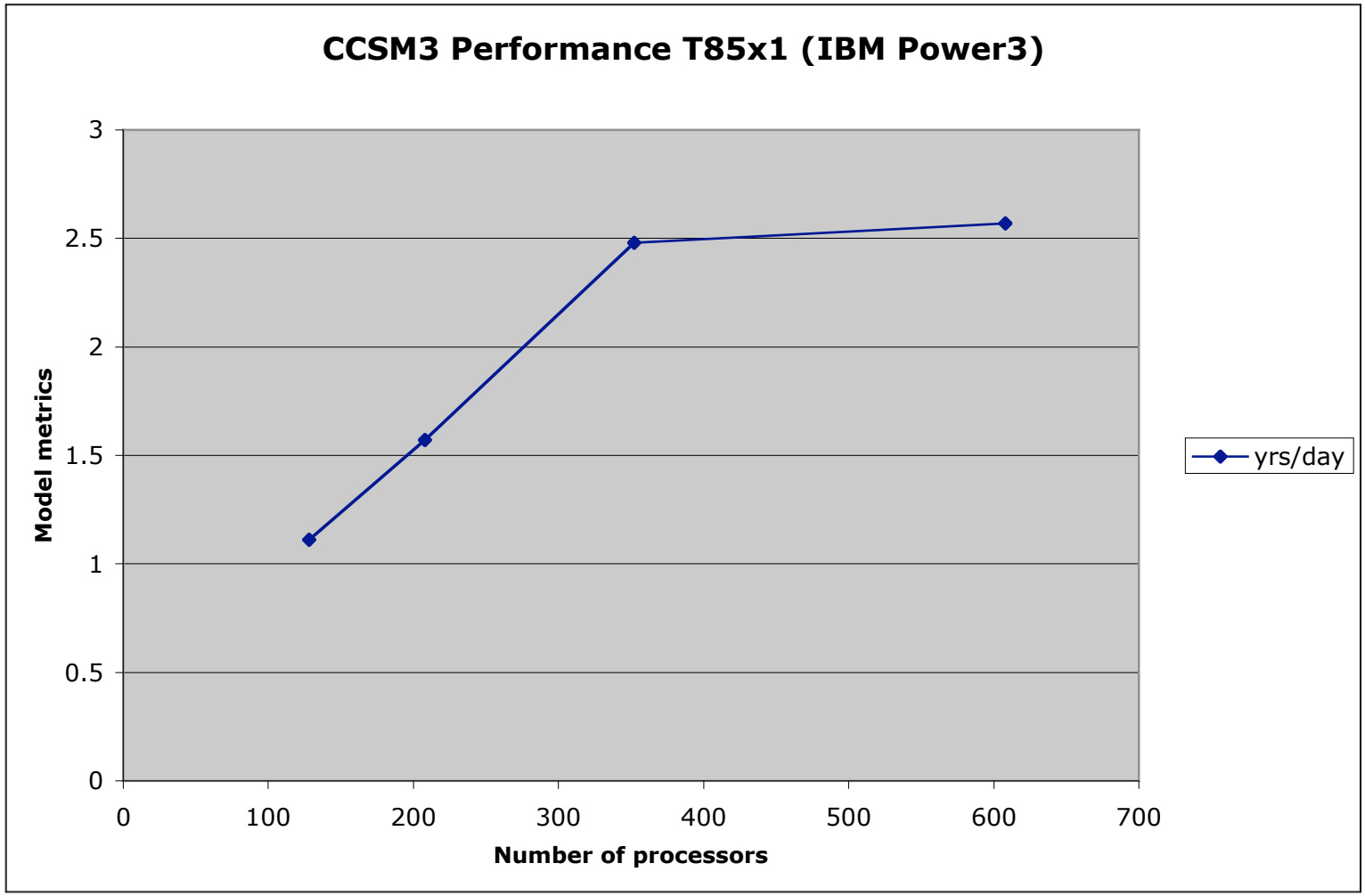

ornl

NCAR

Raw Performance vs Efficiency

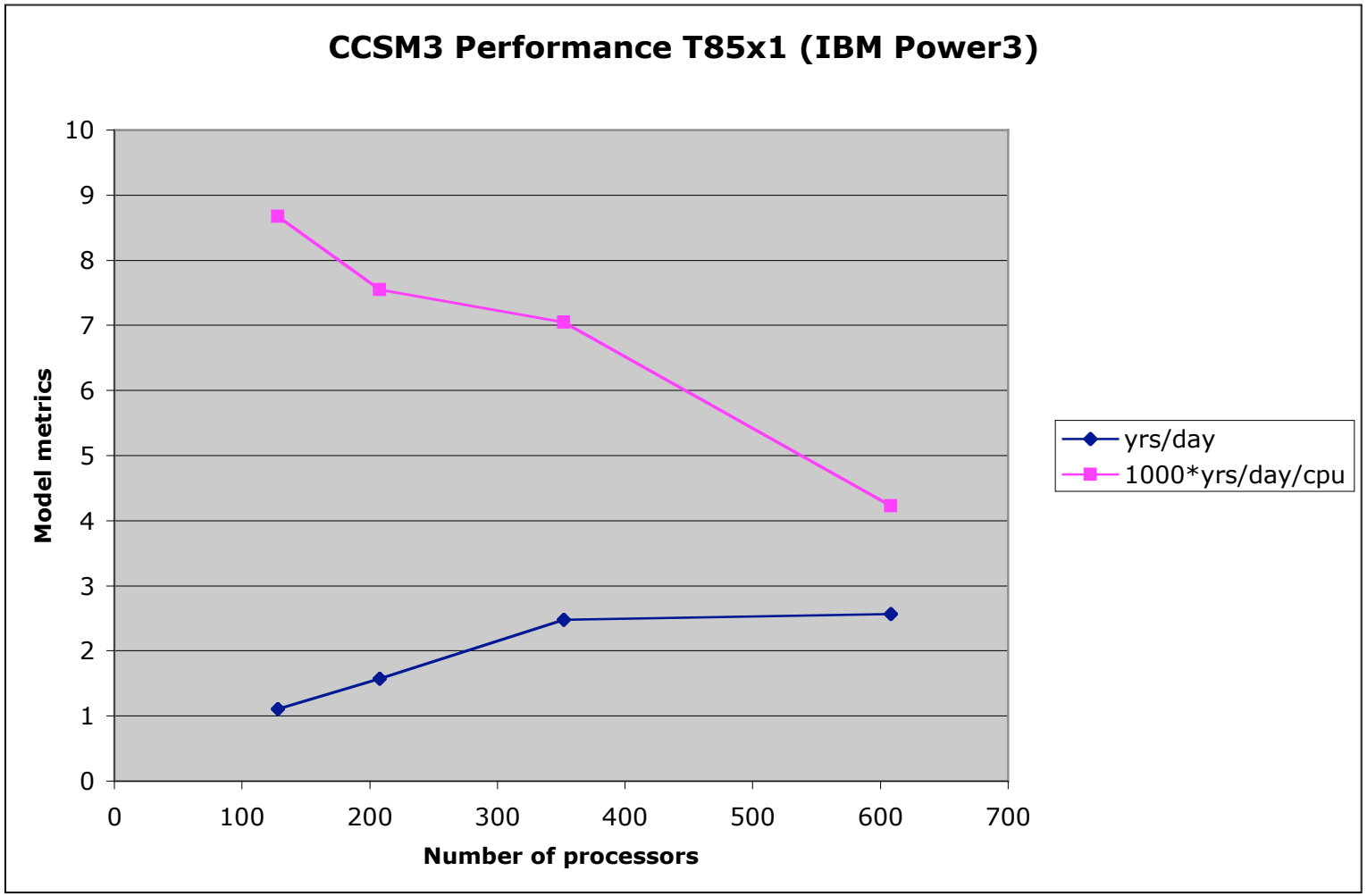

ornl

NCAR

I/O Issues

- More of a CCSM issue than just an X1 issue
  - Want to look at I/O cacher options
    - Better overlap I/O and computation
    - Better insulate computation from I/O congestion
  - Better control over log file output
    - Reduction in number of calls and syncs
    - Compile and runtime controls

ornl

NCAR

T31 Performance

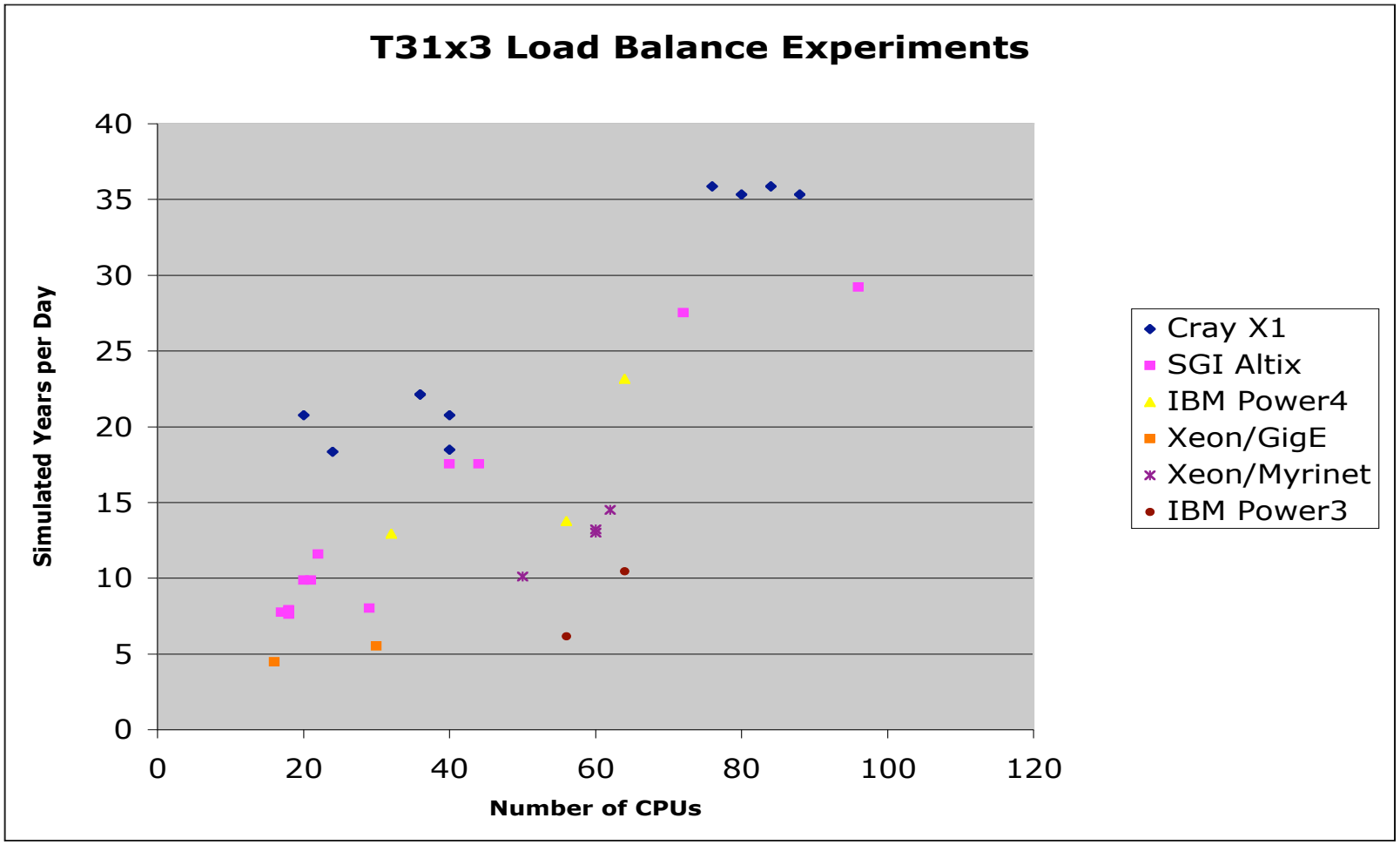

ornl

NCAR

T31 Efficiency

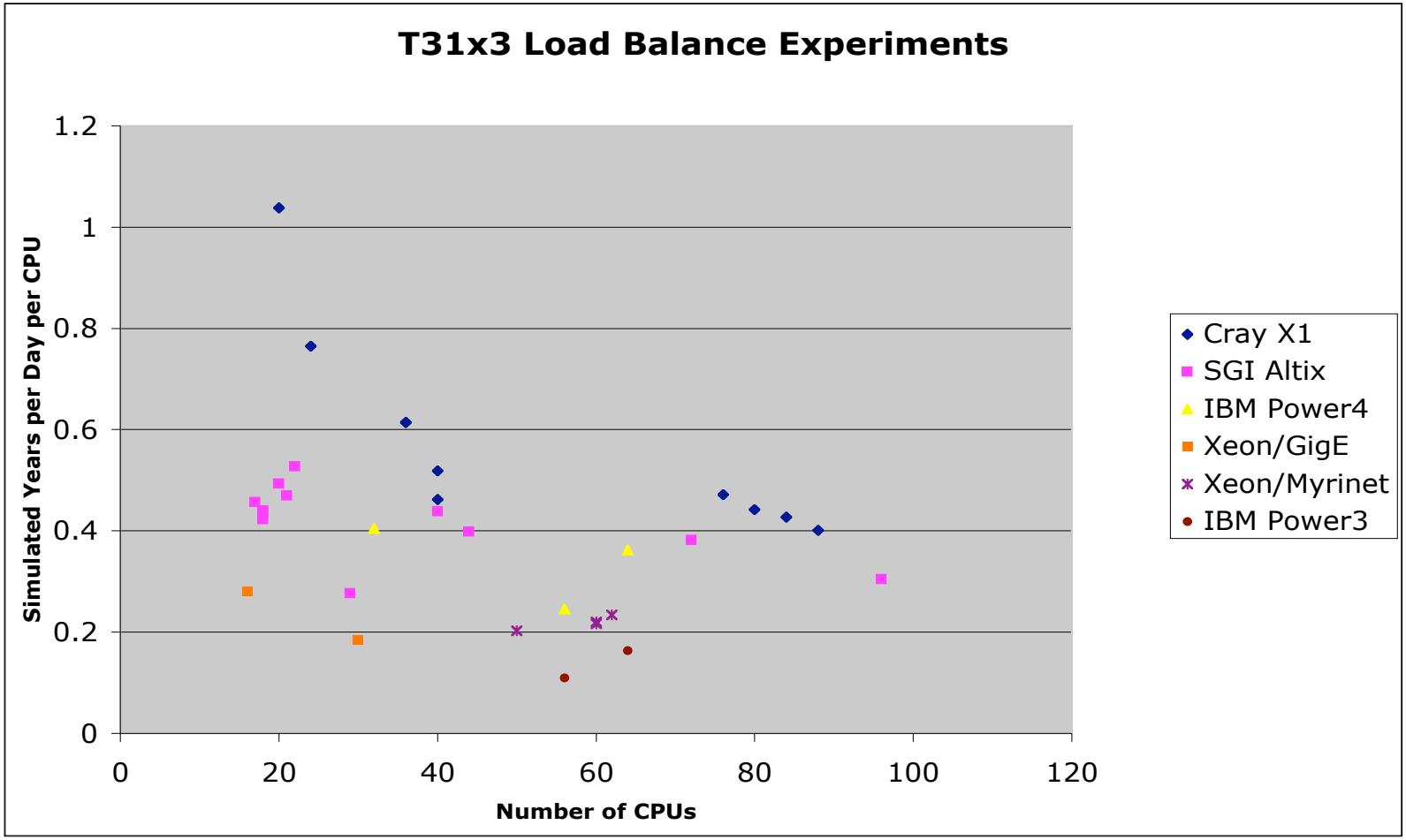

ornl

NCAR

T85 Performance

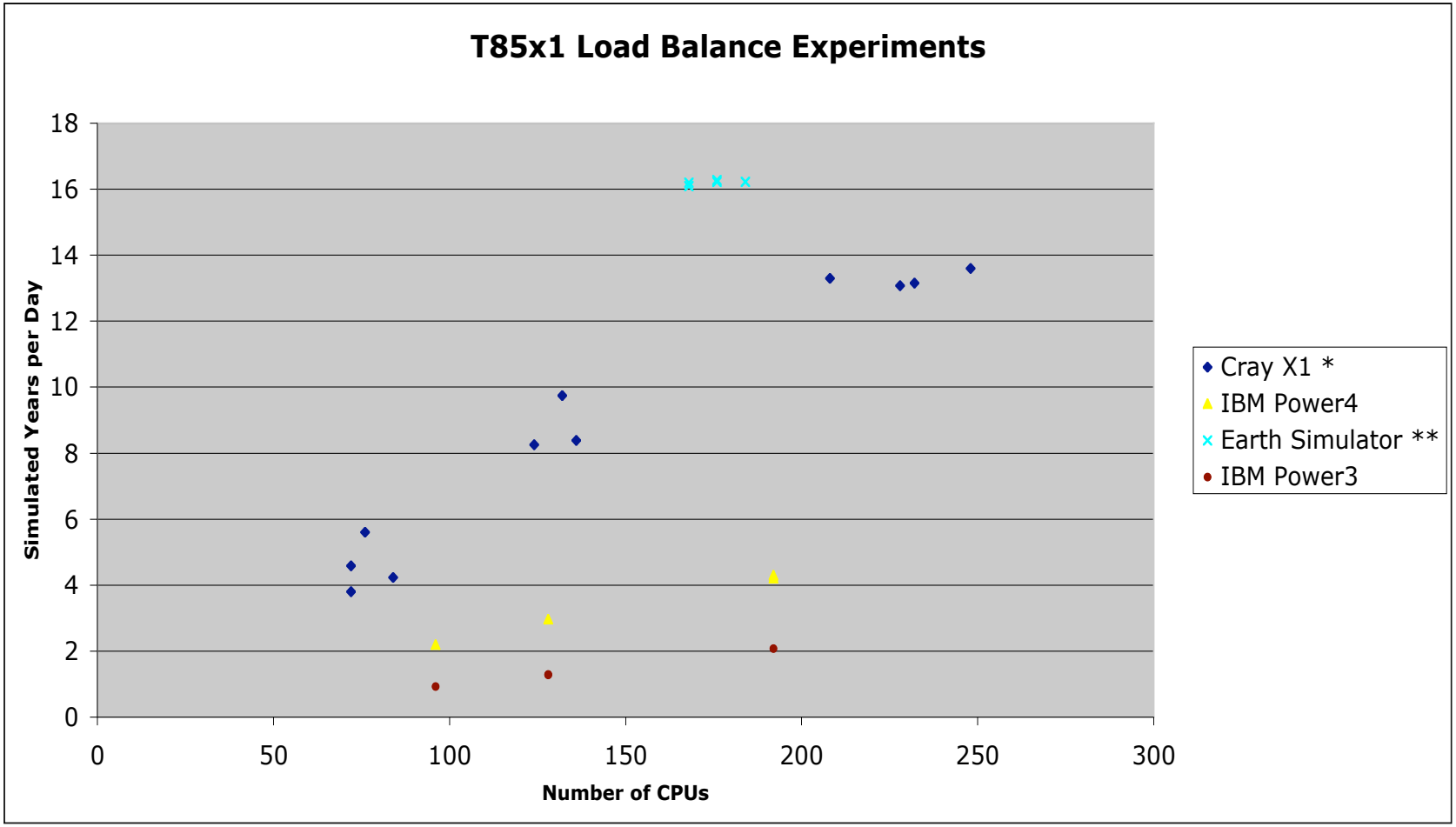

ornl

NCAR

T85 Efficiency

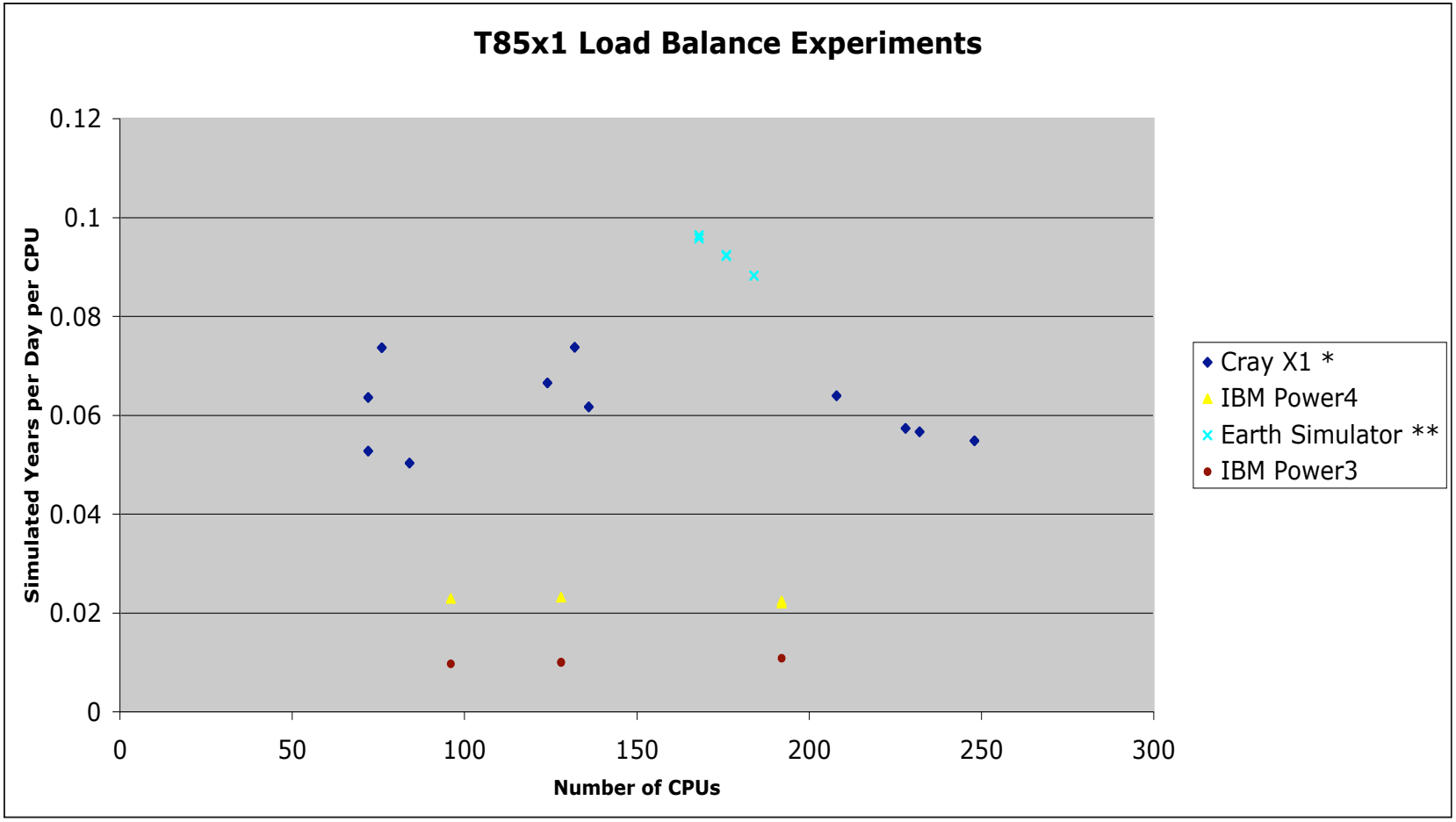

ornl

NCAR

Future Work

- Look at production timing variations … might be more important than CPU speedups!
- Newer software version (includes newer MPI)
- CAM load balancing (fast messaging makes this useful on X1)
- Performance Tuning
  - CLM and CPL need attention.
  - Look at latest POP and CAM speedups (incl. MPI2 and Co-Array Fortran one-sided optimizations)
- Some additional CCSM load balancing exercises
- T85 Validation
- Full Production

ornl

NCAR

IBM Power4 Percent of Peak

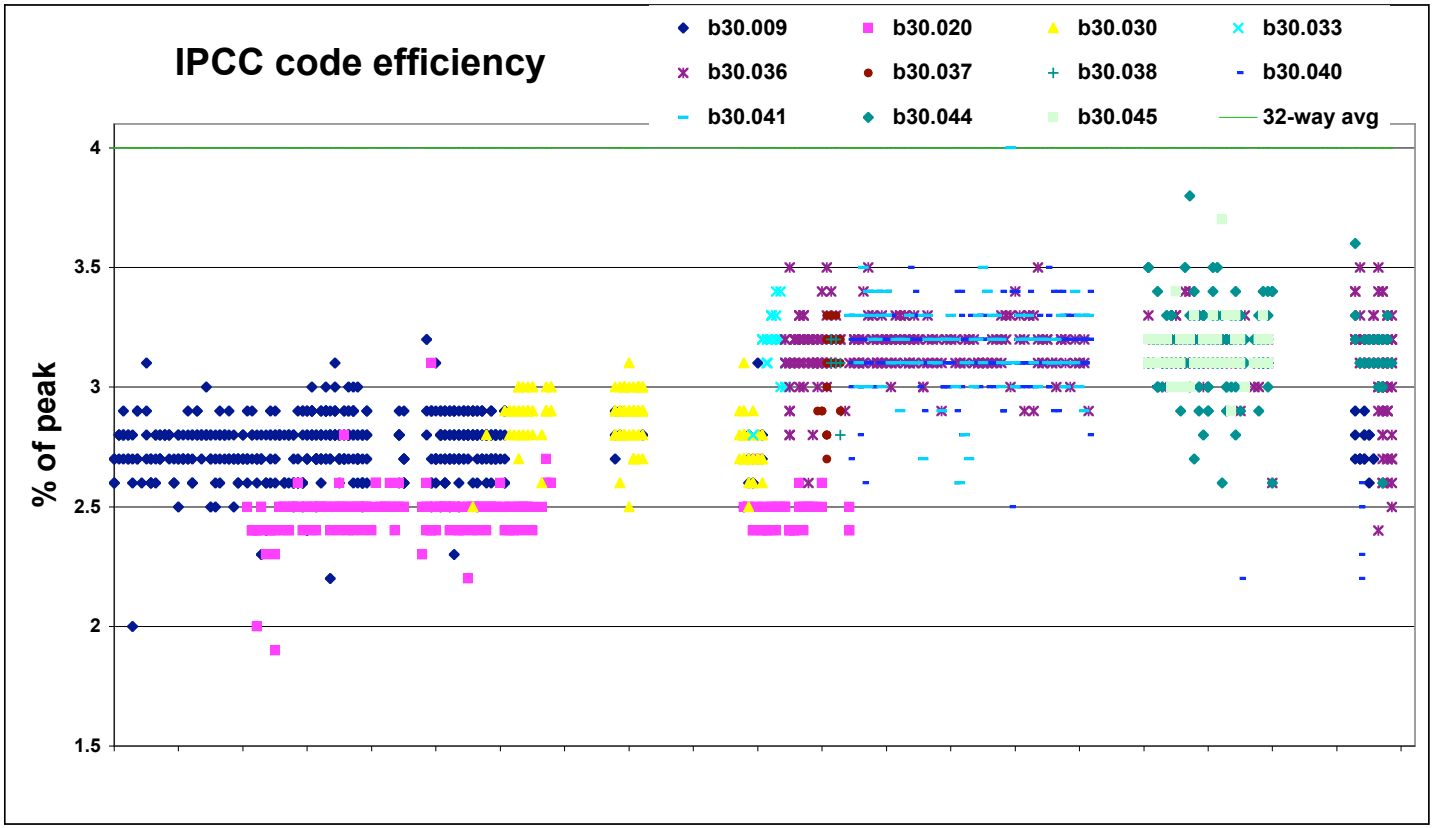

There are a number of reasons: CCSM MPMD, portable code, I/O, network, other

(Information provided by NCAR's Scientific Computing Division)

ornl

NCAR

Summary

- Significant work completed
- Things yet to do to bring CCSM into production on the X1
- Need to concentrate on production metric of system performance
- Thanks to Cray for great support

ornl

NCAR

For Further Information

- CCSM web pages
  - http://www.ccsm.ucar.edu/ccsm3
  - http://www.ccsm.ucar.edu/support_model
    - See CCSM User's Guide
    - See Scripts Tutorial
    - Performance and Platform information will be added
  - http://www.ccsm.ucar.edu/support_model/mach_support.html
- CCSM Bulletin Board
  - http://bb.cgd.ucar.edu
- ORNL X1 evaluation web pages
  - http://www.csm.ornl.gov/evaluation/PHOENIX
- gcarr@ucar.edu, worleyph@ornl.gov

ornl

NCAR

Supplemental Charts

CCSM3 Process Flow

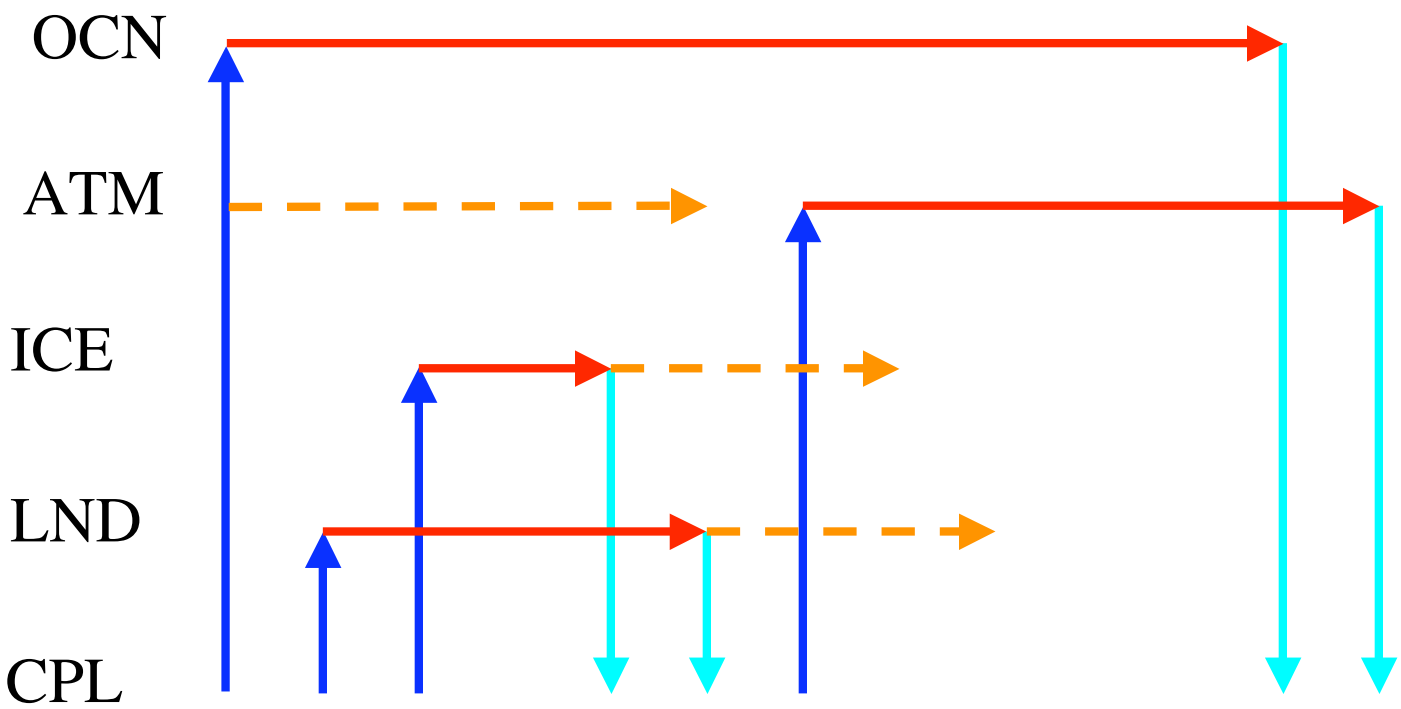

CPL sending data to component (state 1)

CPL receiving data from component (state 3)

Component processing data (state 2)

Component processing (state 4)

The Balancing Act

- Each component has different scaling attributes in part based on different grid sizes
- System architecture/configuration constraints
- No power of 2 performance charts

ornl

NCAR

Load Balancing Example - X1

T31x3	OCN	ATM	ICE	LND	CPL	Tot	Yrs/Day
Case 1	4	16	8	8	4	40	20.76
Case 2	2	16	2	8	8	36	22.12

Case 2 used fewer processors and got better performance

ornl

NCAR

Vectorization Process

- For each component model
  - Port to new (vector) system.
  - Optimize performance (including vectorization).
  - Merge subset of modifications back into development trunk.
  - Validate/Evaluate updated model on all "category 1" platforms.
- For CCSM
  - Import updated component models (lags behind individual).
  - Port and optimize scripts and other CCSM infrastructure to new system.
  - Verify that CCSM runs correctly in all required configurations and tests.
  - Validate climate produced by CCSM.
  - Tune configuration to optimize performance on new system.

ornl

NCAR

Merge Guidelines and Process

- Cannot degrade performance significantly on other target systems
  - Allowable degradation depends on perceived importance (availability) of given platform for science.
- Cannot alter solution (bit-for-bit) on other platforms
  - Can be relaxed when climate validation needs to be repeated on other platforms anyway.
- For CAM and CLM, solution must be independent of number of processors (i.e., reproducibility).
- Limited amounts of architecture-dependent code allowed (i.e., no large scale #ifdef NEC/CRAY/IBM sections)
  - This is for code maintainability. What is or is not permitted varies among the CCSM working groups.
- Actual merge process consists of making a proposal to the relevant component Change Review Board, followed by some period of negotiation.

ornl

NCAR