ISSUE
06
FALL
2012

QUARTERLY NEWSLETTER FOR THE COMPUTER SCIENCE AND MATHEMATICS DIVISION

CSMD

WWW.CSM.ORNL.GOV

this issue

Highlights P.1
New Projects P.3
New Faces P.7
Moving On P.7
Awards P.8
Events P.9
Publications/Presentations P.10
About CSMD P.16

Upcoming Events

SuperComputing 2012,
Salt Lake City, Utah
November 10 - 16

For 24 years, SC has been at the forefront in gathering the best and brightest minds in supercomputing together, with our unparalleled technical papers, tutorials, posters and speakers. SC12 will take a major step forward not only in supercomputing, but in super-conferencing, with everything designed to make the 2012 conference the most 'you' friendly conference in the world. We're streamlining conference information and moving to a virtually real-time method of determining technical program thrusts. No more pre-determined technical themes picked far in advance. Through social media, data mining, and active polling, we'll see which technical interests and issues emerge throughout the year, and focus on the ones that interest you the most.

Highlights

Electronic Control over Attachment and Self-Assembly of Alkyne Groups on Gold

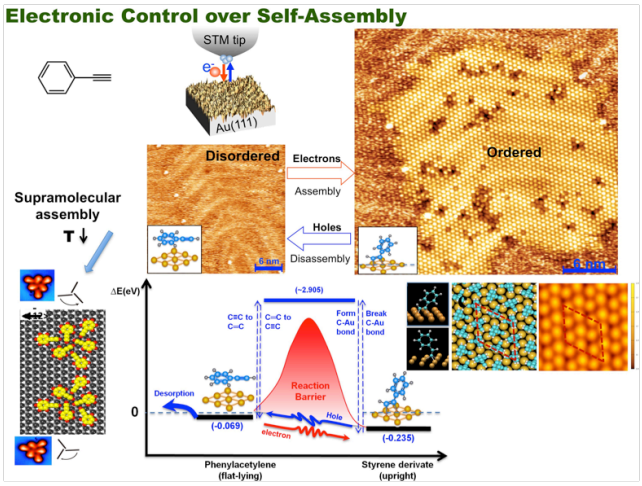

Achievement

Demonstrated a non-thermal, electron-induced approach to the self-assembly of phenylacetylene molecules on gold that allows for a previously unachievable attachment of the molecules to the surface through the alkyne group. While thermal excitation can only desorb the parent molecule due to prohibitively high activation barriers for attachment reactions, localized injection of hot electrons or holes not only overcomes this barrier but also enables an unprecedented control over the size and shape of the self-assembly, defect structures, and the reverse process of molecular disassembly from a single molecule to a mesoscopic length scale.

Significance

Self-assembled monolayers are the basis for molecular nanodevices, flexible surface functionalization, and dip-pen nanolithography. Yet self-assembled monolayers are typically produced by a rather inefficient process that involves thermally driven attachment reactions of precursor molecules to a metal surface, followed by a slow and defect-prone molecular reorganization. The electron-induced excitation method demonstrated in this work may therefore enable new and highly controlled approaches to molecular self-assembly on a surface.

Credit – This work is published in ACS Nano. A portion of this Research at Oak Ridge National Laboratory's Center for Nanophase Materials Sciences was sponsored by the Scientific User Facilities Division, Office of Basic Energy Sciences, U.S. Department of Energy. "Electronic Control over Attachment and Self-Assembly of Alkyne Groups on Gold", Q. Li, C. Han, M. Fuentes-Cabrera, H. Terrones, B.G. Sumpter, W. Lu, J. Bernholc, J. Yi, Z.Gai, A.P. Baddorf, P. Maksymovych, M. Pan, ACS Nano DOI: 10.1021/nn303734r (2012).

OAK RIDGE National Laboratory

Highlights (continued)

Lebrun-Grandie Wins Second Place

CSMD researcher Rahul Sampath's mentee, Damien Lebrun-Grandie, won second place in the 2012 Oak Ridge National Laboratory Nuclear Engineering Science Laboratory Synthesis (NESLS) Poster session. Twenty-eight of the NESLS students presented their work at the 2012 Summer Student Poster Session, which were judged for their excellence in technical achievement and presentation. The participants represent many areas of research throughout the laboratory, including research reactors, safeguards and nonproliferation, material sciences, nonreactor nuclear facilities, reactor and nuclear systems, radioisotope production, and CASL.

ORNL Releases Version 1.4 of ADIOS

Researchers using supercomputers to glean insight into scientific problems can spend much of their time just trying to get massive amounts of data in and out of a machine. CSMD's Scientific Data Group works to minimize this process, and this week its members took a big step forward by releasing its newest update to the Adaptable Input/Output System (ADIOS), version 1.4, which allows users more time to focus on achieving scientific insight and less on managing data.

"Our goal is to take our research and put it in production," says Scott Klasky, group leader of the Scientific Data Group at ORNL. Klasky's group researches methods to streamline this process, called input/output (I/O), on supercomputers.

The group's project started in 2008, when Klasky and his team created ADIOS to help increase by ten-fold I/O on the Oak Ridge Leadership Computing Facility's(OLCF's) Jaguar supercomputer. Four updates and 65 journal publications later, Klasky's team is still looking for ways to make I/O even more efficient.

Version 1.4 represents a fundamental shift in the middleware that goes in tandem with shifts in supercomputing architectures. The Cray XT5 Jaguar, capable of 3.3 thousand trillion calculations per second, is being overhauled and transformed into a Cray XE6 dubbed Titan. The machine will be capable of 20 thousand trillion calculations per second by using a combination of traditional central processing units (CPUs) and fast and efficient graphics processing units (GPUs). Click HERE to read the full article.

Communications of the ACM Research Highlight

CSMD researcher Rahul Sampath is a co-author on the paper A Massively Parallel Adaptive Fast Multipole Method on Heterogeneous Architectures. This paper was invited to be a Research Highlight for the publication Communications of the ACM. The paper describes a parallel fast multipole method (FMM) for highly nonuniform distributions of particles. We employ both distributed memory parallelism (via MPI) and shared memory parallelism (via OpenMP and GPU acceleration) to rapidly evaluate two-body nonoscillatory potentials in three dimensions on heterogeneous high performance computing architectures. Click HERE to read the full article.

A Spontaneous Collaboration

Thomas R. O'Donnell - DEIXIX Magazine

With the help of Oak Ridge computations, scientists are probing the properties of macroscale sponges made of nanoscale carbon-boron tubes. The material could soak up oil spills, help store energy or meet other needs.

In 2007, when Oak Ridge National Laboratory (ORNL) researchers calculated that adding boron would bend carbon nanotubes, they did little with the information.

Boron was one of several elements the computational scientists plugged into their model as they investigated ways to induce useful changes in nanotube structures. There were experiments to compare with the results of most of their calculations. There weren't any to check against the boron-doped nanotube simulations.

"We didn't think anything about boron, really," says Bobby Sumpter, Chemical and Materials Sciences Group leader and director of ORNL's Nanomaterials Theory Institute. "We thought it was interesting how it preferred negative curvature, and we kind of just left it at that."

Then Humberto Terrones, an ORNL-affiliated researcher from Belgium's Université Catholique de Louvain, came to visit last year. He and his brother, Mauricio, of Pennsylvania State University and Japan's Shinshu University, were investigating new nanotube materials.

Humberto Terrones "was talking about how they'd observed these three-dimensional-looking structures when they doped boron in," Sumpter recalls. "I said, 'But, Humberto, remember our results? Where we found these interesting effects and we think we understand exactly what happens?' I hadn't realized they'd done experiments for boron and just learned about it over a casual discussion – which actually turn out to be usually the most productive scientific discussions – just a cup of coffee with a white board."

Sumpter and Vincent Meunier of Rensselaer Polytechnic Institute recalculated the boron results and published them jointly with Rice University doctoral student Daniel Hashim's discovery of three-dimensional, macro-scale nanosponges.

"It's always good to have experimental evidence that backs up theory or vice versa," Hashim says. "In this case we made the theory and the experimental evidence together and it gave this paper a lot more impact."

Click HERE for more information.

Highlights (continued)

Two Open Source Benchmarks from the Extreme Scale System Center (ESSC)

The first Open Source release, SystemBurn, was designed to address the emergent emphasis on power demand engendered in the co-design of trans-petascale and exascale computing systems. SystemBurn assists scientists and engineers in examining the limits and trade-offs between power and throughput, as well as a tool to test systems and their environment. SystemBurn accomplishes this by providing a library of common computational algorithms and an execution framework to compose them into tests to simulate the behavior of real applications or to create maximal synthetic power loads permitting the researcher to establish an upper limits so that power and cooling maybe accurately provisioned. The library includes synthetic loads to simultaneously exercise the various components of a system, including the CPU, memory, accelerators, storage, and network, providing the user with the ability to measure the system at its electrical and thermal maximums. In addition to maximizing electrical usage, the variety of loads supplied with SystemBurn make it possible to gather power and thermal profiles associated with specific tasks to simulate real applications. As part of the Open Source release, SystemBurn has been enhanced to provide performance statistics in addition to the thermal information it already collects, allowing users to correlate throughput performance with power usage. Future enhancements to SystemBurn will enable auto-tuning of load selection, giving a user with little or no prior knowledge of the system a good basis for maximizing power draw.

The second Open Source release, SystemConfidence, addresses the increasing impact that the variability of small scale latencies can have on application scalability on extreme scale systems. SystemConfidence implements an execution framework, measurement tools, and analysis tools for studying the "real-world" latencies in HPC systems (currently, communication and I/O). Utilizing the Oak Ridge Benchmarking (ORB) Timer library, SystemConfidence can expose unexpected characteristics in networks through statistical analysis of operational latencies. SystemConfidence has identified application scalability impacts of system software upgrades, performance defects in commodity and custom interconnect products, and design improvements which were subsequently incorporated into two contemporary market offerings.

SystemBurn and SystemConfidence were developed as part of the ESSC partnership with the Department of Defense. Principal authors are Jeff Kuehn, Josh Lothian, and Steve Poole. The whole ESSC team contributed ideas; numerous summer students contributed code to the projects. Development can be tracked at https://github.com/jlothian/systemburn and https://github.com/jlothian/sysconfidence respectively.

New Projects

DiaMonD: An Integrated Multifaceted Approach to Mathematics at the Interfaces of Data, Models, and Decisions

DOE Math Centers Program

ORNL team members: Bobby Sumpter

To address the challenges of end-to-end modeling of complex CS&E problems in a unified, systematic, and integrated fashion, a team (including CSMD researcher Bobby Sumpter) is working to establish DiaMonD, a MMICC focusing on multifaceted mathematics at the interfaces of Data, Models, and Decisions. The goals of DiaMonD are (1) to develop advanced mathematical methods and analysis for multimodel, multiphysics, multiscale model problems driven by frontier DOE applications; (2) to create theory and algorithms for integrated inversion, optimization, and uncertainty quantification for these complex problems; and (3) to disseminate the philosophy of a data-to-decisions approach to modeling and simulation of complex problems to the broader applied math and computational science communities through workshops and other outreach.

University of Texas at Austin: Omar Ghattas (Co-Lead PI), George Biros, Clint Dawson, Robert D. Moser, J. Tinsley Oden; Massachusetts Institute of Technology: Karen Willcox (Co-Lead PI), Youssef Marzouk, Ruben Juanes; Colorado State University: Donald Estep Florida State University: Max Gunzburger; Los Alamos National Laboratory: Carl Gable; Oak Ridge National Laboratory: Bobby Sumpter; Stanford University: Lexing Ying

International Collaboration Framework for Extreme Scale Experiments (ICEE)

DOE Collaboratories Program

ORNL team members: Scott Klasky

Large-scale scientific exploration in domains such as high-energy physics, fusion, and climate are based on international collaborations. As these collaborations produce more and more data, the existing workflow management systems are hard pressed to keep pace. A necessary solution is to process, analyze, summarize and reduce the data before it reaches the relatively slow disk storage system, a process known as in transit processing (or in-flight analysis). We will dramatically increase the data handling capability of collaborative workflow systems by leveraging the popular in transit processing system known as ADIOS, and integrating this with FastBit to provide selective data accesses. These new features will contribute to a new collaborative system named ICEE that aims at significantly improving the data flow management for distributed workflows. The improved data processing capability will enable large international projects to make near real-time collaborative decisions. We will also work with ESNET to provide RDMA based methods under ESNET to lower the latency of data movement from KSTAR (the fusion

New Projects (continued)

tokamak in South Korea), to ORNL, PPPL, and LBNL. By extending our data abstraction to work in situations CSMD Group leader Scott Klasky is co-lead on ICEE.

SPARTN: Sparse Projections Achieving Randomization in Tree-like Networks

DARPA GRAPHS Program

ORNL team members: Blair Sullivan and Charlotte Kotas

Blair Sullivan was recently awarded funding as the Principal Investigator for SPARTN: Sparse Projections Achieving Randomization in Tree-like Networks, a new project funded as part of the new Defense Advanced Research Projects Agency (DARPA) Graph-theoretic Research in Algorithms and the PHenomenology of Social networks (GRAPHS) program. Blair is leading a small team with members from ORNL and Stanford University in developing new methods for tree-like structure identification and sparse random projections in large networks. The GRAPHS program as a whole aims to address mathematical research on large networks and graphs, with an emphasis on results that are applicable to social networks and other networks of interest to the Department of Defense (DoD). SPARTN focuses on developing the theoretical underpinnings for two mathematical problems that are prerequisites to establishing a robust framework for graph-based signal processing. (Image right)

Scalable Data Management Analysis and Visualization Institute (SDAV)

DOE SciDAC Institutes

ORNL team members: Scott Klasky

The institute provides comprehensive expertise in scientific data management, analysis, and visualization aimed at transferring state of the art techniques into operational use by application scientists on leadership-class computing facilities over the next five years. ORNL's team works directly with application scientists to assist them by applying the best tools and technologies at their disposal, and learning from the scientists where tools fall short. Technical solutions to any shortcomings are implemented to ensure that the tools overcome mission-critical challenges in the scientific discovery process. These tools are then further developed and improved as these computing platforms change over the next five years. As an example, ORNL's team has created the ADIOS framework and have worked with over 20 other teams to continually improve its software, and has recently released ADIOS 1.4 this past summer.

CSMD Group leader Scott Klasky serves on the executive committee of SDAV, lead by Arie Shoshani (LBL). Scott is the ORNL lead and the leader of the Data Management track of the institute. For more information, please visit http://www.sdav-scidac.org.

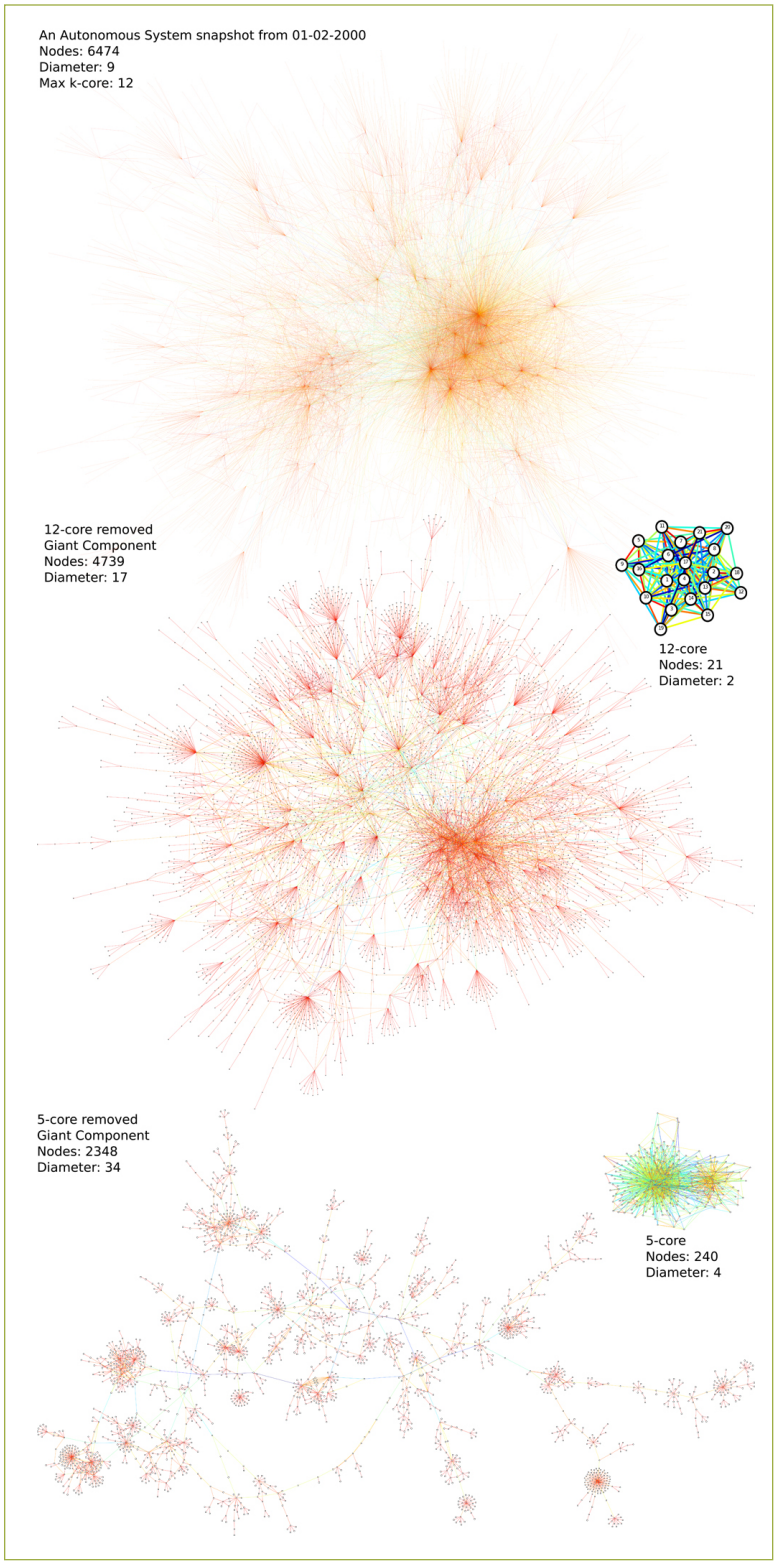

Visualizations of an autonomous systems network snapshot, illustrating how its tree-like structure becomes visible with the removal of a tiny fraction of carefully chosen nodes. Image Credit: Adcock, S., Mahoney 2012.

New Projects (continued)

Plasma Surface Interactions (PSI)

DOE FES SciDAC Institutes

ORNL team members: David E. Bernholdt, Jay Jay Billings, John Canik, Jeremy Meredith, Philip C. Roth, Roger Stoller, Stanislav Golubov, and Brian Wirth

The Plasma Surface Interactions, or PSI project is one of two new fusion-related project getting underway as part of the SciDAC-3 program. The project will develop and use predictive tools to describe the evolution of plasma-facing materials. This understanding is crucial to improved predictions of the performance of plasma-facing components needed to ensure magnetic fusion energy development beyond ITER. The project is led by Brian Wirth of ORNL and the University of Tennessee, and also includes ANL, General Atomics, LANL, PNNL, UC San Diego, UIUC, and U Mass Amherst. The ORNL portion of the team spans several divisions. Wirth is part of CASL, and the Fusion Energy and Materials Science and Technology Divisions are represented, in addition to CSMD. CSMD researcher David Bernholdt is the overall technical lead for the computer science and applied math aspects of the project, while Jeremy Meredith and Phil Roth bring their expertise in visualization and data analytics; and performance, resilience, and energy efficiency and connect the project to two of the SciDAC Intsitutes in which they also participate. Jay Jay Billings is the software architect and lead developer for the major new simulation code that the project will develop. For more information, please visit PSI's site at http://collab.mcs.anl.gov/display/PSIscidac/

SciDAC Edge Physics Simulation Project

DOE SciDAC Institutes

ORNL team members: Scott Klasky

Fusion simulation is moving toward building a next-generation numerical experiment based upon first principles physics. One focus in SciDAC Edge Physics Simulation Project (EPSI) is to develop an advanced computational framework that can support tight coupling between large-scale kinetic multi-scale physics systems, support in-situ uncertainty quantification (UQ), verification and validation (V&V), and enable pluggable analysis and visualization services that can ingest and assimilate large size in-situ data. Specifically, the EPSI team are addressing key data challenges by augmenting ADIOS with DataSpaces to enable hybrid staging and in-situ/in-transit data processing workflows, and the eSiMon dashboard for pervasive access to the next generation numerical fusion experiment.

CSMD Group leader Scott Klasky serves on the executive committee and leads the computer science effort for EPSI.

PISCEES

DOE SciDAC Institutes, BER Partnership

ORNL team members: Kate Evans, Matt Norman, and Pat Worley

At Oak Ridge, researchers on PISCEES are focusing on the verification and validation aspects of the new dynamical cores being implemented into CISM. First, a software package will be developed to assess the current dynamical core of CISM that is being implemented within the next release of the CESM. This will provide a basic level of testing and evaluation that can be extended to the next generation developments occurring within the project. Using the recently released observational datasets of ice sheet flow (e.g. Rignot et al, 2012, Science; Rignot and Mouginot, 2012, GRL), ORNL researchers will work with collaborators within PISCEES to incorporate these datasets as both initial conditions and also to provide validation benchmarks to give more confidence in the recently developed high resolution ice sheet capability. The verification and validation of the performance of the high-resolution ice sheet configuration will help identify performance issues and bottlenecks. As validation, performance assessments will also provide a quantitative measure of the value of model development in terms of the impact on model throughput. This project is supported by the US Department of Energy's Office of Science under the Scientific Discovery through Advanced Computing (SciDAC) program. It is a joint effort between the Biological and Environmental Research (BER) program office and the Advanced Scientific Computing Research (ASCR) program office. This project benefits from participation in three SciDAC Institutes. The FASTMath Institute will collaborate on scalable solver algorithms for ice sheet models. Researchers from the QUEST Institute will work to apply new uncertainty quantification techniques for ice sheet model projections and parameter estimation. Finally, the SUPER institute will help to ensure the new ice sheet models perform well on current and advanced computer architectures.

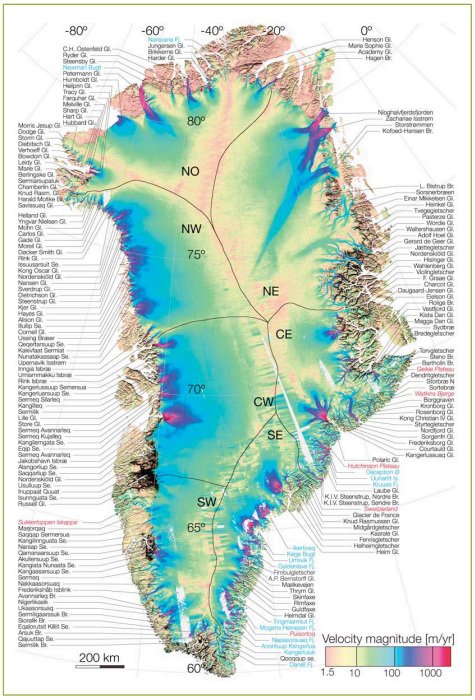

New Projects (continued)

Multiscale Methods for Accurate, Efficient, and Scale-Aware Models of the Earth System

DOE SciDAC Institutes, BER Partnership

ORNL team members: Jim Hack, PI, Rick Archibald, Chris Baker, Kate Evans, and Jennifer Ribbeck (Bredesen Center student)

Some of the greatest challenges in projecting the future of the Earth's climate result from the significant and complex interactions among small-scale features and large-scale structures of the ocean and atmosphere. In order to advance Earth system science, a new generation of models that capture the structure and evolution of the climate system across a broad range of spatial and temporal scales is required. Our primary goal is to produce better models for these critical processes and constituents from ocean-eddy and cloud-system to global scales through improved physical and computational implementations.

The Multiscale Methods project comprises an integrated team of climate and computational scientists to accelerate the development and integration of multiscale atmospheric and oceanic parameterizations into the Community Earth System Model (CESM). Our primary objective is to introduce accurate and computationally-efficient treatments of interactive clouds, convection, and eddies into the next generation of CESM at resolutions approaching the characteristic scales of these structures. This project will deliver treatments of these processes and constituents that are scientifically useful over resolutions ranging from 2 to 1/16 degrees.

The Oak Ridge portion of this project is focused on the development of methods to accurately and efficiently incorporate these multi scale features. Time-stepping algorithms that maintain efficiency and robustness for a wide range of spatial configurations have been implemented in a shallow-water version of the Community Atmosphere Model (CAM) dynamical core and show demonstrable accuracy and robustness for time steps many times greater than the CFL of the smallest resolved features. Extension to the full CAM is underway, and this is being achieved by advancing the configuration of CAM to include third party solver and parallel strategy libraries. This will provide minimal disruption for climate model developers, open the door for incorporation of emulation and sub-grid pdf generators needed to fully quantify the nature and sensitivity of the multiscale model, and allow related efforts to develop CAM for acceleration on hybrid computing systems to hook into ongoing community developments occurring within the third-party libraries. We outline a strategy to merge these separate but related efforts and allow accelerated time-stepping methods on hybrid architecture that keeps pace with community algorithmic development.

Applying Computationally Efficient Schemes for BioGeochemical Cycles

DOE SciDAC Institutes, BER Partnership

ORNL team members: Forrest Hoffman (PI), Patrick Worley, Richard Mills, and Jitendra Kumar

The ACES4BGC Project seeks to advance the predictive capabilities of Earth System Models (ESMs) by reducing two of the largest sources of uncertainty, aerosols and biospheric feedbacks, with a highly efficient computational approach. In particular, this project will implement and optimize new computationally efficient tracer advection algorithms for large numbers of tracer species; add important biogeochemical interactions between the atmosphere, land, and ocean

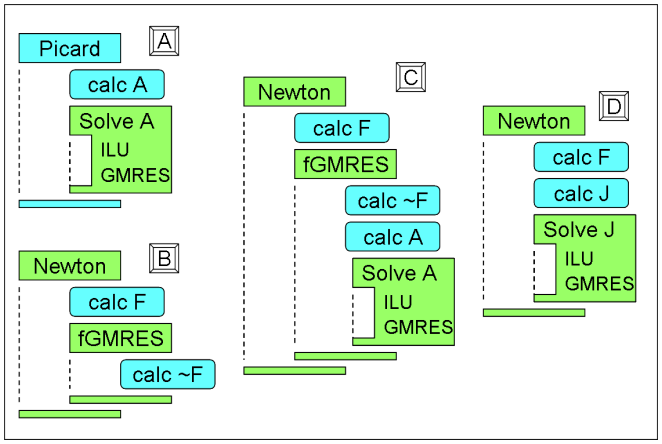

A schematic diagram of four methods of interfacing CAM (blue boxes) and Trilinos (green boxes). Method A simply calls Trilinos linear solvers within an existing nonlinear solver of a climate code. Methods B-D use Newton-based nonlinear methods and require function pointers from Trilinos to climate component subroutines to compute the residual vector F, a forcing matrix A as a preconditioner, or the true Jacobian J. Calculations of the residual at perturbed conditions for the Jacobian-Free algorithm are illustrated as ~F, but call the same subroutine.

models; and apply uncertainty quantification (UQ) techniques to constrain process parameters and evaluate uncertainties in feedbacks between biogeochemical cycles and the climate system. The resulting improvements to the Community Earth System Model (CESM) will deliver new scientific capabilities and significantly improve the representation of biogeochemical interactions at the canopy-to-atmosphere, rivers-to-coastal oceans, and open oceans-to-atmosphere interfaces. ACES4BGC partners modelers with decades of cumulative research experience and a team of computer and computational scientist building scalable solvers and tools, developing advanced UQ methods, and applying technologies for performance optimization through U.S. DOE SciDAC Institutes.

New Faces in CSMD

Guannan Zhang

Guannan Zhang is currently the Householder Fellow in the Computational Mathematics Group of the Computer Science and Mathematics Division. Dr. Zhang received his Bachelor's degree in Mathematics from the School of Mathematics at Shandong University in the summer of 2007. Under the advisement of Professors Weidong Zhao and Shige Peng, he obtained his first Master's degree in Mathematics in the summer of 2010, also from the School of Mathematics at Shandong University. He enrolled in the doctoral program in Computational Science at Florida State University during the summer of 2009, under the supervision of Max Gunzburger. He obtained his second Master's degree in the fall of 2011 and completed his Ph. D. in the summer of 2012. Dr. Zhang's research focuses on uncertainty quantification(UQ) including numerical methods for stochastic partial differential equations, stochastic calibration and optimization methods for inverse problems and many related applications.

Moving On

Steve Hodson

Former Computer Science Research member Steve Hodson has given up his computer for a parachute and taken the leap to retirement. While at ORNL, Steve researched network and IO performance issues for the Extreme Scale Systems Center. He came to ORNL from Los Alamos where he spent time working on Computer Science and Astrophysics problems. Steve is an avid skydiver and was part of the jump team that set the record for the largest formation of skydivers over 60 years old.

Richard Mills

Richard Mills, formerly in the Computational Earth Science Group, transferred to the Earth and Aquatic Sciences Group of the Environmental Sciences Division (ESD). Richard joined ORNL in 2004 after completing his Ph.D. in computer science at the College of William and Mary. He is one of the original authors of the open-source, massively parallel subsurface flow and reactive transport simulation code PFLOTRAN, which he began working on during a DOE Computational Science Graduate Fellowship practicum at Los Alamos National Laboratory in 2003. This work helped plant the seeds of a SciDAC-2 project that funded further development of PFLOTRAN, which has grown into a community code being used in diverse applications such as geothermal energy, geologic carbon sequestration, contaminant fate and transport, and ecohydrology. Richard's work on PFLOTRAN has led to increasingly strong collaborations with ESD researchers. In ESD, Richard will lead efforts to apply high-performance computing to environmental problems involving integrated surface and subsurface hydrology and biogeochemical transport, and will continue to work with other members of the Climate Change Science Institute to understand the interactions between such processes and terrestrial ecosystem dynamics and climate feedbacks. Work in leadership-class computing will continue to constitute a significant part of his research, and he plans to maintain strong ties with collaborators in CSMD.

Awards

Distinguished Employee Program

The Computing and Computational Sciences Directorate program is recognizing an employee from each division each month for distinguished contributions; the first awards were made in April, 2011.

July

Eirik Endeve is the CSMD distinguished employee for July. He just published his second major paper in The Astrophysical Journal. Both papers were superb and comprehensive studies of the stationary accretion shock instability in core collapse supernovae and the turbulence it induces, the latter of which has important ramifications for the supernova explosion mechanism and for all future three-dimensional supernova models.

August

Jennifer Williams and Lora Wolfe were instrumental in organizing the Discovery 2020 Workshop in Santa Fe, New Mexico that focused on quantum computing, modeling and simulation, and programming languages, which will provide analytics and advanced computing in the 2015/2020 time frame. The workshop was hosted by ORNL, Los Alamos National Laboratory, and the Department of Defense. Jennifer and Lora organized the location; meeting logistics; materials needed for the workshop; interacted with the sponsor on attendee requirements; work with the speakers on presentation materials, travel, and honorariums; and all social activities for the workshop. In advance of the workshop, they set up participants FOBs so they could log onto the ORNL system where OpenSHMEM was loaded and made sure that NCCS had everything set up on the computer. In Santa Fe, they made sure all of the participants were taken care of throughout the workshop and that all special dietary needs were handled. They also made sure that all of the networking, AV, seating, and WebEx was taken care of onsite during the entire workshop. They shipped manuals back to participants' sites so they did not have to carry them in their luggage, and made all of the CD's of the workshop. Once they returned from travel, Jennifer completed all of the close-out of the workshop, which entails consolidating the surveys from the participants and providing feedback to the sponsor and the hosting of WebEx for remote participants. The work they did was so excellent, that the DoD organizers have already given high praise to Jennifer and Lora for the fantastic job that they did and especially for being available to help no matter what was needed.

September

George Ostrouchov is receiving this award for leading the development of R infrastructure that puts ORNL on the world map as the place to go for big data analytics in R. He designed the architecture and leads the development of a series of R packages that provide a very high-level programming interface for distributed data analytics, literally "programming with big data" (pbd). The packages, branded with a "pbd" prefix, tightly couple distributed linear algebra libraries with R and engage the R community to develop more analytics for big data. This enables R to be a scalable analytics platform on OLCF resources. George also organized a recent R programming workshop at OLCF and brought an R mirror site to NICS.

The Scientific Data Group (SDG) is proud to have George lead analytics in its portfolio that includes the best talent for scientific data research from I/O through middleware to analytics and visualization. George also leads data analytics in the Remote Data Analysis and Visualization (RDAV) center at NICS.

Other Awards/Recognition

Seed Award Winner

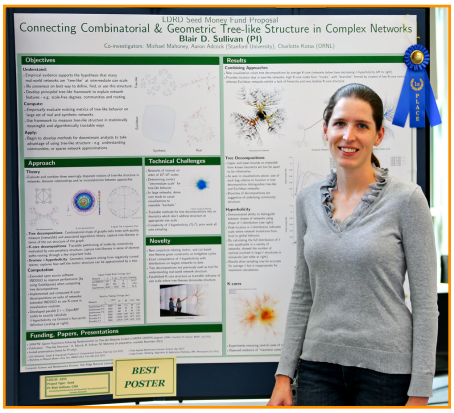

CSMD researcher Blair Sullivan won the Seed Award at the 2012 LDRD Poster Session for her project "Connecting Combinatorial and Geometric Tree-like Structure in Complex Networks." Large, complex networks have become ubiquitous in domains as diverse as biology, sociology, and infrastructure, yet our tools for understanding them are still rudimentary. Most methods focus on network structure at a very global (e.g. diameter) or very local (e.g. clustering) scale, yet many of the dynamics of interest are determined by the structural properties at an intermediate scale. This project laid the groundwork for understanding networks where that intermediate structure has tree-like features by establishing novel relationships between several ways of quantifying tree-like structure in large networks, including hyperbolic geometry, the combinatorial objects called tree

Awards

decompositions, and a measure of core-periphery structure called k-cores. Research done during this project achieved the computation of exact hyperbolicity distributions on the largest networks to date, improvements to the visualization routines in the open-source software INDDGO, and a new conjecture that captures a surprising interplay between several graph parameters. These accomplishments have resulted in follow-on funding from DARPA, several invited presentations, and two papers in preparation. This work was joint with Aaron Adcock and Michael Mahoney, both of Stanford University, and Charlotte Kotas, a postdoc in the Complex Systems group of CSMD.

Director's Research & Development Award

Galen Shipman of the Computer Science and Mathematics Division won the Director's Research & Development Award for a project titled "Accelerating Data Acquisition, Reduction, and Analysis at SNS."

CCSD Directorate Award

Billy Fields was a shining star in this year's United Way campaign and went the extra mile to raise over $1,000 which will help our community. Billy came up with the idea to have a United Way Directorate Challenge centered around the theme of Barney the Purple Dinosaur (an idea formulated from his Division Director, Barney Maccabe, and Clayton Webster who wears many purple shirts). He turned his idea into a very creative United Way fund raising initiative and spent countless hours creating, advertising, and implementing the Challenge. His efforts single-handedly helped our Directorate exceed our United Way goal of increasing our participation by 50%. Go Team Purple!

2012 Director's Science Delivery Award

CSMD Researcher Forrest Hoffman (along with ORNL researchers Jitendra Kumar and Richard Mills), is on the team that received the United States Department of Agriculture's 2012 Director's Science Delivery Award for their work on the USDA's project ForWarn.
ForWarn is a satellite-based forest disturbance monitoring system for the conterminous United States. It delivers new forest change products every eight days and provides tools for attributing abnormalities to insects, disease, wildfire, storms, human development or unusual weather. Archived data provide disturbance tracking across all lands since 2000. http://forwarn.forestthreats.org/

Events

Seminars

- **Mauro Perego**, Dept. of Scientific Computing, Florida State University - *Mathematical and Numerical Modeling of Ice-Sheets Dynamics*
- **Hoang Tran**, Dept. of Mathematics, University of Pittsburgh - *Uncoupling the incompressible fluid flows in multi-physics and multi-domain applications*
- **Peter J. Mucha**, The University of North Carolina at Chapel Hill - *Community Detection in Multislice Networks*
- **John Burkardt** - *The Interpolation Problem in 1D*
- **Catalin Trenchea**, University of Pittsburgh - *Acceleration Through Uncoupling and Timestepping*
- **Henry L. Cohn**, Microsoft Research New England - *Order and disorder in energy minimization*
- **Ryan McClarren**, Texas A&M University - *Bayesian MARS UQ Research at the Center for Radiative Shock Hydrodynamics (CRASH)*
- **Duane Rosenberg** - *Some aspects of high-order computational fluid dynamics*
- **Paul Sutter**, Univ. of Illinois at Urbana-Champaign - *HPC: High-Performance Cosmology*
- **Amilcare Porporato**, Dept. of Civil and Environmental Engineering Duke University - *Stochastic soil moisture dynamics: from soil-plant biogeochemistry and land-atmosphere interactions to sustainable use of soil and water resources*
- **Jan S. Hesthaven**, Brown University - *Reduced Models You Can Believe In*
- **Judy Qiu**, School of Informatics and Computing, Indiana University - *Scientific Data Analysis on Cloud and HPC Platforms*
- **Jong Choi**, University of Tennessee and ORNL - *Mining Hidden Contexts for Building Predictive Pre-fetcher in ADIOS*

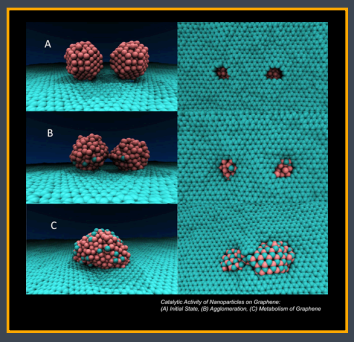

Cover Art

Catalytic Activity of Nanoparticles on Graphene: (A) Initial State, (B) Agglomeration, (C) Metabolism of Graphene. Image (B) will appear on the cover for forthcoming issue of *Particle.*

Campos-Delgado J., Baptista D.L., Fuentes-Cabrera M., Sumpter B.G., Menier V., Terrones H., Kim Y.A., Muramatsu H., Hayashi T., Endo M., Terrones M., "Iron particle nano-drilling of few layer graphene at low electron beam accelerating voltages", Particle, in press (2012).

Publications/Presentations

ORNL Report

- Bernholdt, David E. (ORNL), NEAMS Software Licensing, Release, and Distribution: Implications for FY2013 Work Package Planning, 6/2012
- Bernholdt, David E. (ORNL), Recommendations for NEAMS Engagement with the NRC, 9/2012
- Bernholdt, David E. (ORNL), Recommendations for NEAMS Engagement with the NRC: Preliminary Report, 6/2012
- Dobson, Jonathan D. (ORNL), Kuehn, Jeffery A. (ORNL), Poole, Stephen W. (ORNL), Hodson, Stephen W. (ORNL), Glandon, Steven R. (ORNL), Reister, David B. (ORNL), Lewkow, Nicholas R. (ORNL), Peek, Jacob T. (ORNL), SystemBurn: Principles of Design and Operation Release 3.0, 9/2012
- Fiala, David J. (ORNL), Mueller, Frank (North Carolina State University), Engelmann, Christian (ORNL), Ferreira, Kurt Brian (Sandia National Laboratories (SNL)), Brightwell, Ron (Sandia National Laboratories (SNL)), Riesen, Rolf (IBM Research, Ireland), Detection and Correction of Silent Data Corruption for Large-Scale High-Performance Computing, 7/2012
- Hebbur Venkata Subba Rao, Vishwas (ORNL), Archibald, Richard K. (ORNL), Evans, Katherine J. (ORNL), Emulation to simulate low resolution atmospheric data, 8/2012
- Kuehn, Jeffery A. (ORNL), Chapman, Barbara (University of Houston, Houston), Curtis, Anthony R. (ORNL), Mauricio, Ricardo (University of Houston, Houston), Pophale, Swaroop (University of Houston, Houston), Nanjegowda, Ramachandra (University of Houston, Houston), Banerjee, Amrita (University of Houston, Houston), Feind, Karl (SGI), Poole, Stephen W. (ORNL), Smith, Lauren (United States Department of Defense), OpenSHMEM Application Programming Interface, v1.0 Final, 1/2012
- Kuehn, Jeffery A. (ORNL), Poole, Stephen W. (ORNL), Hodson, Stephen W. (ORNL), Lothian, Josh (ORNL), Dobson, Jonathan D. (ORNL), Reister, David B. (ORNL), Lewkow, Nicholas R. (ORNL), Glandon, Steven R. (ORNL), Peek, Jacob T. (ORNL), SystemBurn: Principles of Design and Operation, Release 2.0, 1/2012

Presentation material - conference

- Baker, Christopher G. (ORNL), Multi-precision inner/outer solvers via generic programming libraries, SIAM Annual Meeting/2012, Minneapolis, Minnesota
- Baker, Christopher G. (ORNL), R&D In Trilinos for Emerging Parallel Systems, Accelerating Computation Science Symposium/2012, Washington, D.C., District of Columbia
- Baker, Christopher G. (ORNL), Gallivan, Dr. Kyle A (Florida State University), Van Dooren, Dr. Paul (Universite Catholique de Louvain), Incremental Methods for Computing Extreme Singular Subspaces, SIAM Conference on Applied Linear Algebra/2012, Valencia,
- Baker, Christopher G. (ORNL), Heroux, Dr. Michael A (Sandia National Laboratories (SNL)), An Overview of the Trilinos Project, European Seminar on Computing, Pilsen,
- Chacon, Luis (ORNL), Philip, Bobby (ORNL), Rodriguez Rodriguez, Manuel (ORNL), Wang, Zhen (ORNL), Adaptive Magnetohydrodynamics Simulations with SAMRAI - PP12, 15th SIAM Conference on Parallel Processing for Scientific Computing, Savannah, Georgia

Publications/Presentations (continued)

- Chacon, Luis (ORNL), Philip, Bobby (ORNL), Wang, Zhen (ORNL), Rodriguez Rodriguez, Manuel (ORNL), Adaptive Magnetohydrodynamics Simulations with SAMRAI - Copper, TWELFTH COPPER MOUNTAIN CONFERENCE ON ITERATIVE METHODS, Copper Mountain, Colorado
- Chacon, Luis (ORNL), Philip, Bobby (ORNL), Wang, Zhen (ORNL), Rodriguez Rodriguez, Manuel (ORNL), Adaptive Magnetohydrodynamics Simulations with SAMRAI - SIAM Annual,/2012 SIAM Annual Meeting, Minneapolis, Minnesota
- Chao C., Chen Y., Roth Philip C., "DOSAS: Mitigating the Resource Contention in Active Storage Systems," IEEE Cluster 2012, Beijing, China, September 2012
- Chen, Wei-Chen (ORNL), Ostrouchov, George (ORNL), Pugmire, Dave (ORNL), Prabhat, (Lawrence Berkeley National Laboratory (LBNL)), Wehner, Michael (Lawrence Berkeley National Laboratory (LBNL)), Model-based clustering analysis of large climate simulation datasets,/2012 Joint Statistical Meetings, San Diego, California
- Cobb, John W. (ORNL), DataONE: An interoperable data repositories case study, HUBbub/2012: The HUBzero conference, Indianapolis, Indiana
- Guy, Robert (University of California, Davis), Philip, Bobby (ORNL), A multigrid method for the coupled implicit immersed boundary equations, 10th WORLD CONGRESS ON COMPUTATIONAL MECHANICS (WCCM/2012), Sao Paulo,
- Hauck, Cory D. (ORNL), A Collision-Based Hybrid Method for Linear Transport, Boltzmann Models in Kinetic Theory, Providence, Rhode Island
- Hauck, Cory D. (ORNL), High-order, Entropy-based Models for Linear Transport in Slab Geometries, Computational Challenges in Hot Dense Plasmas, Los Angeles, California
- Hauck, Cory D. (ORNL), High-order, Entropy-based Models for Linear Transport in Slab Geometries, Kinetic and Quantum Transport, Reunion Conference, Lake Arrowhead, California
- Humble, Travis S. (ORNL), Tamper-indicating Quantum Optical Seals, IEEE Photonics Conference, San Francisco, California
- Lee Seyong, "Directive-Based GPU Programming Models: Current Status and Tuning Opportunities", 2012 CScADS Summer Workshop on Libraries and Autotuning for Extreme-scale Applications, August 2012.
- Liu Zhuo, Wang Bin, Carpenter Patrick, Li Dong, Vetter Jeffrey, Yu Weikuan. "PCM-Based Durable Write Cache for Fast Disk I/O". In IEEE International Symposium on Modeling, Analysis and Simulation of Computer and Telecommunication Systems (MASCOTS), Arlington, Virginia, August, 2012
- Pannala, Sreekanth (ORNL), Mukherjee, Partha P. (ORNL), Allu, Srikanth (ORNL), Nanda, Jagjit (ORNL), Martha, Surendra K. (ORNL), Dudney, Nancy J. (ORNL), Turner, John A. (ORNL), A micro-macroscopic volume-averaged model for batteries, Electronic Materials and Applications/2012, American Ceramic Society, Orlando, Florida
- Philip, Bobby (ORNL), Clarno, Kevin T. (ORNL), Sampath, Rahul S. (ORNL), Berrill, Mark A. (ORNL), Allu, Srikanth (ORNL), Barai, Pallab (ORNL), The Advanced Multi-Physics (AMP) Framework With An Application to Nuclear Reactor Simulations, SIAM Annual Meeting/2012, Minneapolis, Minnesota
- Philip, Bobby (ORNL), Wang, Zhen (ORNL), Rodriguez Rodriguez, Manuel (ORNL), Berrill, Mark A. (ORNL), Pernice, Michael (Idaho National Laboratory (INL)), 3D Structured Adaptive Mesh Refinement and Multilevel Preconditioning for Non-Equilibrium Radiation Diffusion, ORNL/UTK Numerical Day, Oak Ridge, Tennessee
- Philip, Bobby (ORNL), Wang, Zhen (ORNL), Rodriguez Rodriguez, Manuel G. (ORNL), Berrill, Mark A. (ORNL), Pernice, Michael (Idaho National Laboratory (INL)), 3D Structured Adaptive Mesh Refinement and Multilevel Preconditioning for Non-Equilibrium Radiation Diffusion, ASTRONUM/2012, Kona-Kailua, Hawaii
- Philip, Bobby (ORNL), Wang, Zhen (ORNL), Rodriguez Rodriguez, Manuel G. (ORNL), Berrill, Mark A. (ORNL), Pernice, Michael (Idaho National Laboratory (INL)), Dynamic Implicit 3D Adaptive Mesh

Publications/Presentations (continued)

Refinement For Non-Equilibrium Radiation Diffusion, SIAM Annual Meeting/2012, Minneapolis, Minnesota

- Radhakrishnan, Balasubramaniam (ORNL), Gorti, Sarma B. (ORNL), Stoica, Grigoreta M. (ORNL), Stoica, Alexandru Dan (ORNL), Muralidharan, Govindarajan (ORNL), Muth, Thomas R. (ORNL), Wang, Xun-Li (ORNL), Utilizing in-situ neutron diffraction for mesoscale simulation of recrystallization texture in polycrystalline aluminum,/2012 TMS Annual Meeting & Exhibition, Orlando, Florida
- Radhakrishnan, Balasubramaniam (ORNL), Kulkarni, Nagraj S. (ORNL), Sohn, Yong Ho (University of Central Florida), Hunter Jr., Jerry (Virginia Polytechnic Institute and State University (Virginia Tech)), Computation and Validation of Effective Diffusion Coefficient in a Polycrystal, TMS/2012 Annual Meeting and Exhibition, Orlando, Florida
- Reuter, Matthew G. (ORNL), Exorcising Ghost Transmission from ab initio Calculations of Electron Transport, Gordon Research Conference on Electron Donor-Acceptor Interactions, Newport, Rhode Island
- Roth, Philip C. (ORNL), The Effect of Emerging Architectures on Data Science (and other thoughts),/2012 CScADS Workshop on Scientific Data and Analytics for Extreme-scale Computing, Snowbird, Utah
- Stoyanov, Miroslav K. (ORNL), Gunzburger, Max D. (ORNL), Finite Element Methods for Peridynamics: A Tale of Many Quadratures, SAMSI - Non-local Continuum Models for Diffusion, Mechanics, and Other Applications, Research Triangle Park, North Carolina
- Stoyanov, Miroslav K. (ORNL), Gunzburger, Max D. (ORNL), Finite Element Methods for Peridynamics: A Tale of Many Quadratures, SIAM SEAS/2012, Huntsville, Alabama
- Stoyanov, Miroslav K. (ORNL), Gunzburger, Max D. (ORNL), Burkardt, John V. (ORNL), Pink and $1/f^ \alpha$ Noise inputs in Stochastic PDEs, SIAM UQ/2012, Raleigh, North Carolina
- Stoyanov, Miroslav K. (ORNL), Webster, Clayton G. (ORNL), Gradient Based Model Reduction Approach for High Dimensional Uncertainty Quantification, SIAM ANNUAL MEETING/2012, Minneapolis, Minnesota
- Stoyanov, Miroslav K. (ORNL), Webster, Clayton G. (ORNL), Projection Based Approach for Uncertainty Quantification of High Order Stochastic Systems, SIAM SEAS/2012, Huntsville, Alabama
- Vetter, Jeffrey S. (ORNL), Glassbrook, Richard A. (ORNL), Dongarra, Jack J. (ORNL), Schwan, Karsten (Georgia Institute of Technology), Yalamanchili, Sudhakar (Georgia Institute of Technology), Loftis, Bruce (ORNL), McNally, Stephen T. (ORNL), Meredith, Jeremy S. (ORNL), Reed, Patti (University of Tennessee, Knoxville (UTK)), Rogers, James H. (ORNL), Roth, Philip C. (ORNL), Spafford, Kyle L. (ORNL), Sharkey, Kevin M. (ORNL), Keeneland-Enabling Heterogeneous Computing for the Open Science Community, 2nd EPSCoR Workshop: Modeling Advanced Materials, Systems Biology and Alternative Energy Sources, Knoxville, Tennessee
- Vetter J.S., "Aspen: a performance modeling language for codesigning Exascale applications and architectures." Clusters, Clouds, and Data for Scientific Computing, Lyon, France, 2012, http://web.eecs.utk.edu/~dongarra/CCGSC-2012/
- Williams, Patrick D. (ORNL), Reuter, Matthew G. (ORNL), On the Information Content of Conductance Histograms: Transport Mechanisms, Cooperative Effects, and Junction Symmetries, CNMS User Meeting, Oak Ridge, Tennessee
- Worley, Patrick H. (ORNL), Capturing Computer Performance Variability in CESM Experiments, 17th Annual Community Earth System Model Workshop, Breckenridge, Colorado
- Worley, Patrick H. (ORNL), Performance Evaluation and Analysis Consortium (PEAC) End Station, SC11: International Conference for High Performance Computing, Networking, Storage and Analysis, Seattle, Washington
- Worley, Patrick H. (ORNL), Craig, Anthony (National Center for Atmospheric Research (NCAR)), Dennis, John (National Center for Atmospheric Research (NCAR)), Mirin, Arthur A. (Lawrence Livermore National Laboratory (LLNL)), Taylor, Mark (Sandia National Laboratories (SNL)), Vertenstein, Mariana

Publications/Presentations (continued)

(National Center for Atmospheric Research (NCAR)), Computer Performance of the Community Earth System Model (CESM), SC11: International Conference for High Performance Computing, Networking, Storage and Analysis, Seattle, Washington

- Worley, Patrick H. (ORNL), Evans, Katherine J. (ORNL), Lipscomb, William (Los Alamos National Laboratory (LANL)), Nichols, Jeff (ORNL), Price, Stephen (Los Alamos National Laboratory (LANL)), Salinger, Andy (Sandia National Laboratories (SNL)), Parallel implementation and performance of SEACISM version of CISM, 17th Annual Community Earth System Model Workshop, Breckenridge, Colorado
- Worley Patrick H., Roth Philip C., Huck K., Biersdorff S., Lee C.W., Malony A., Millstein S., Shende S., Spear W.J., "Approaches to and Tools for Project Performance Tracking and Analysis," (poster) Scientific Discovery through Advanced Computing (SciDAC-3) Principal Investigator Meeting, Rockville, Maryland, September 2012
- Xing, Yulong (ORNL), Conservative, discontinuous-Galerkin methods for the generalized Korteweg-de Vries equation, International Conference on Applied Mathematics/2012, Hong Kong,
- Xing, Yulong (ORNL), Energy conserving discontinuous Galerkin methods for the wave equations, AMS/ 2012 Spring Southeastern Section Meeting, Tampa, Florida
- Xing, Yulong (ORNL), High order numerical methods for the shallow water equations, 11. 2011 DOE Applied Mathematics Program Meeting, Washington, District of Columbia "
- Xing, Yulong (ORNL), High order numerical methods for the shallow water equations, The Second ORNL-UTK Numerical Day, Oak Ridge, Tennessee
- Yu W., Que X., Tipparaju V., and Vetter J.S., "HiCOO: Hierarchical cooperation for scalable communication in Global Address Space programming models on Cray XT systems," Journal of Parallel and Distributed Computing, 2012, http://dx.doi.org/10.1016/j.jpdc.2012.01.022.

Presentation material – no conference

- Baker, Christopher G. (ORNL), Recent Work at the Intersection of Optimization and Linear Algebra, ORNL
- Bartlett, Roscoe A. (ORNL), TriBITS Lifecycle Model : Version 1.0 (presented to CSMD), ORNL
- Dexter, Nicholas C. (ORNL), Stoyanov, Miroslav K. (ORNL), Webster, Clayton G. (ORNL), Stochastic Collocation Methods for UQ with DENOVO, ORNL
- Hauck, Cory D. (ORNL), Optimization-Based Closures for Radiative Transport, Ames, Iowa
- Hauck, Cory D. (ORNL), Optimization-Based Methods for Discretization of Partial Differential Equations, University of Maryland, College Park
- Hauck, Cory D. (ORNL), Ryan, McClarren (Texas A&M University), A Collision-Based Hybrid Method for Multiscale, Linear Transport, Reston, VA
- Marin, Gabriel (ORNL), MIAMI: Computing recipes for performance tuning, Snowbird, UT
- Roth, Philip C. (ORNL), Plasma Surface Interactions: Performance, Energy, and Resilience Issues, Argonne National Laboratory, Argonne, IL
- Worley, Patrick H. (ORNL), Capturing Computer Performance Variability in CESM Experiments, Oak Ridge National Laboratory, Oak Ridge, TN
- Xing, Yulong (ORNL), Energy conserving discontinuous Galerkin methods for the wave equations, University of Science and Technology of China, CHN
- Xing, Yulong (ORNL), Energy conserving discontinuous Galerkin methods for the wave equations, Seminar, University of Massachusetts, Dartmouth MA
- Xing, Yulong (ORNL), Energy conserving discontinuous Galerkin methods for the wave equations, Brown University, Providence, RI

Publications/Presentations (continued)

- Xing, Yulong (ORNL), High order numerical methods for the shallow water equations, Ohio State University, OH
- Xing, Yulong (ORNL), Positivity preserving well-balanced methods for the shallow-water equations, University of Texas, Austin
- Xing, Yulong (ORNL), Positivity preserving well-balanced methods for the shallow-water equations, Xiamen University, Xiamen, China
- Xing, Yulong (ORNL), Positivity preserving well-balanced methods for the shallow-water equations, Brown University, Providence, RI

Publication - Journal

- Campos-Delgado J., Baptista D.L., Fuentes-Cabrera M., Sumpter B.G., Menier V., Terrones H., Kim Y.A., Muramatsu H., Hayashi T., Endo M., Terrones M., "Iron particle nano-drilling of few layer graphene at low electron beam accelerating voltages", Particle, in press (2012). [Selected for the cover of the journal]
- Chandrakumar K. R. S., Puretzky A. A., Rouleau C., Readle J., Geohegan D. B., More K., Duscher G., Sumpter B.G., Irle S., Morokuma K.,"High-Temperature Transformation of Iron-Decorated Single-Wall Carbon Nanohorns to Nanooysters: A Combined Experimental and Theoretical Study", Nanoscale, in press (2012).
- Chen J.H., Yu X., Hong K., Messman J., Pickel D.L., Xiao K., Dadmun M.D., Mays J.W., Rondinone A.J., Sumpter B.G., Kilbey S.M.,"Ternary behavior and systematic nanoscale manipulation of domain structures in P3HT/PCBM/P3HT-b-PEO films", J. Mat. Chem. 22, 13013 (2012).
- Friemel G., Park J.T., Maier T.A., Tsurkan V., Li Y., Deisenhofer J., Krug von Nidda H.A., Loidl A., Ivanov A., et al., "Reciprocal-space structure and dispersion of the magnetic resonant mode in the superconducting phase of RbxFe2-ySe2 single crystals," Phys. Rev.B 85, 140511(R) (2012).
- Heredia A., Meunier V., Bdikin I. K., Gracio J., Balke N., Jesse S., Tselev A., Agarwal P., Sumpter B. G., Kalinin S. V., and Kholkin A. L., "Nanoscale ferroelectricity in crystalline gamma glycine", Adv. Func. Mater. 22, 2996 (2012).
- Hood R. Q., Kent P. R. C., and Reboredo F. A.. "Diffusion Quantum Monte Carlo study of the equation of state and point defects in aluminium". Physical Review B 85 134109 (2012).
- Kumar R., Li Y., Sides S. W., Mays J. W., Sumpter B. G., "Morphology diagrams for A2B copolymer melts: real-space self-consistent field theory", J. Phys. Conf. Series, in press (2012).
- Li Q., Han C., Fuentes-Cabrera M., Terrones H., Sumpter B. G., Lu W., Bernholc J., Yi J., Gai Z., Baddorf A. P, Maksymovych P., Pan M., "Electronic Control over Attachment and Self-assembly of Alkyne Groups on Gold", ACS Nano, DOI: 10.1021/nn303734r (2012).
- Lopez-Bezanilla A., Campos-Delgado J., Sumpter B. G., Baptista D.L., Hayashi T., Kim Y.A., Muramatsu H., Endo M., Achete C.A., Terrones M., Meuneir V., "Geometric and Electronic Structure of Closed Graphene Edges", J. Phys. Chem. Lett. 3, 2097 (2012).
- Lopez-Bezanilla A., Huang J., Humberto Terrones, Sumpter B. G.,"Structure and Electronic Properties of Edge-Functionalized Armchair Boron Nitride Nanoribbons", J. Phys. Chem. C., 116, 15675 (2012).
- Luo H., Yamani Z., Chen Y., Lu X., Wang M., Li S., Maier T., Danilkin, S., Adroja, D., et al., "Electron doping evolution of the anisotropic spin excitations in BaFe2−xNixAs2," Phys. Rev. B 86, (2012).
- Maier T.A., "Superconductivity in Striped and Multi-Fermi-Surface Hubbard Models: From the Cuprates to the Pnictides," J. Sup. Nov. Mag. 25, 1307 (2012).
- Mays J. W., Kumar R., Sides S.W., Goswami M, Sumpter B.G., Hong K.L., Wu X., Russel T.P., Gido S., Avgeropoulos A., Tsoukatos T., Hadjichristidis N., Beyer F.,"Morphologies of poly(cyclohexadiene) diblock copolymers", Polymer, doi.org/10.1016/j.polymer.2012.08.047 (2012).

Publications/Presentations (continued)

- Wang S. G.; Ward R.C.C.; Hesjedal T.; Zhang X. G.; Wang C.; Kohn A.; Ma Q. L.; Zhang J.; Liu H. F.; Han X. F., "Interface Characterization of Epitaxial Fe/MgO/Fe Magnetic Tunnel Junctions," J. Nanosci. Nanotechnol. 12 (2), 1006–1023 (2012).
- Wesolowski D. J., Sofo J. O., Bandura A. V., Zhang Z., Mamontov E., Predota M., Kumar N., Kubicki J. D., Kent P. R. C., Vlcek L., Machesky M. L., Fenter P. A., Cummings P. T., Anovitz L. M., Skelton A., Rosenqvist J.. "Comment on "Structure and dynamics of liquid water on rutile TiO2 (110)"". Physical Review B 86 167401 (2012).
- Zhang J.; Zhang X. -G.; Han X. F., "Spinel Oxides: Δ1 Spin-Filter Barrier For a Class of Magnetic Tunnel Junctions," Appl. Phys. Lett. 100 (22), 222401 (2012).
- Zhang X. -G.; Xiang T., "Tunable Coulomb Blockade and Giant Coulomb Blockade Magnetoresistance in a Double Quantum Dot System," Int. J. Quantum Chem. 112 (1), 28–32 (2012).

Invited Talk

- Sumpter Bobby G.,"Nanostructured Soft Matter and Multicomponent Materials for Energy Sciences", Department of Physics and Astronomy Colloquium, University of Tennessee, September (2012)

Community Service

David Bernholdt: Engineering with Computers peer reviewer

David Bernholdt: Computational Science and Engineering (CSE) 2012 program committee

David Bernholdt: High Performance Computing (HiPC 2012) program committee

Christian Engelmann: IEEE Transactions on Parallel and Distributed Systems (TPDS) peer reviewer

Christian Engelmann: International Journal of High Performance Computing Applications (IJHPCA) peer reviewer

Christian Engelmann: Journal of Parallel and Distributed Computing (JPDC) peer reviewer

Christian Engelmann: IEEE International Symposium on Parallel and Distributed Processing and Applications (ISPA) 2012 technical program track vice-chair

Christian Engelmann: International Workshop on Fault-Tolerance for HPC at Extreme Scale (FTXS) program committee

Christian Engelmann: International Workshop on MapReduce and its Applications (MAPREDUCE) program committee

Manju Gorentla: High Performance Computing (HiPC 2012) program committee

Manju Gorentla: IEEE International Conference on Networks (ICON 2012) program committee

Greg Koenig: IEEE International Conference on Networks (ICON 2012) program committee

Philip C. Roth: SC12 posters committee (posters reviewed in August)

Philip C. Roth: SC12 Doctoral Showcase (submissions reviewed in August/September)

Brad Settlemyer: Parallel Data Storage Workshop 2012 program committee member

Sudharshan Vazhkudai: International Workshop on Knowledge Discovery Using Cloud and Distributed Computing Platforms 2012 program committee

Sudharshan Vazhkudai: Resilience 2012 program committee

Jeffrey S. Vetter: co-chair of SC12 Technical Papers

About CSMD

The Computer Science and Mathematics Division (CSMD) is ORNL's premier source of basic and applied research in high-performance computing, applied mathematics, and intelligent systems. Basic and applied research programs are focused on computational sciences, intelligent systems, and information technologies.

Our mission includes working on important national priorities with advanced computing systems, working cooperatively with U.S. industry to enable efficient, cost-competitive design, and working with universities to enhance science education and scientific awareness. Our researchers are finding new ways to solve problems beyond the reach of most computers and are putting powerful software tools into the hands of students, teachers, government researchers, and industrial scientists.

The Division is composed of 10 of Groups. These Groups and their Group Leaders are:

- Complex Systems - Jacob Barhen
- Computational Astrophysics - Tony Mezzacappa
- Computational Chemical and Materials Sciences - Bobby Sumpter
- Computational Earth Sciences - Danny McKenna
- Computational Engineering and Energy Sciences - John Turner
- Computational Mathematics - Ed D'Azevedo (Interim)
- Computer Science Research – David Bernholdt
- Future Technologies - Jeff Vetter
- Scientific Data - Scott Klasky

About this Newsletter

This newsletter is compiled from information submitted by CSMD Group leaders, public announcements and searches.

Please contact Daniel Pack if you have information you would like to contribute.

Contact Information and Links

CONTACTS

CSMD Director -
Barney Maccabe - maccabeab@ornl.gov

Division Secretary -
Lora Wolfe - wolfelm@ornl.gov

Director of Special Programs/Chief Scientist -
Steve Poole - spoole@ornl.gov

ORNL TeraGrid Lead -
John Cobb - cobbjw@ornl.gov

Technical Communications -
Daniel Pack - packdl@ornl.gov

LINKS

Computer Science and Mathematics Division - www.csm.ornl.gov
Computing and Computational Sciences Directorate - computing.ornl.gov
Oak Ridge National Laboratory - www.ornl.gov

OAK RIDGE National Laboratory